PCPT

Pasco County Public Transportation

Transit Infrastructure

Guidelines Manual

June 2005

PASCO COUNTY MPO FLORIDA 1887

Pasco County Public Transportation

Transit Infrastructure Guidelines Manual

June 2005

Prepared for:

PASCO COUNTY
METROPOLITAN PLANNING ORGANIZATION
7530 Little Road
New Port Richey, FL 34654
Phone: (727) 847-8140
Fax: (727) 847-8084

PASCO COUNTY PUBLIC TRANSPORTATION (PCPT)
8620 Galen Wilson Boulevard
Port Richey, FL 34668
Phone: (727) 834-3200
Fax: (727) 834-3344

Prepared by:

Tindale-Oliver & Associates, Inc.
1000 North Ashley Drive
Suite 100
Tampa, FL 33602
Phone: (813) 224-8862
Fax: (813) 226-2106

Table of Contents

Introduction 4
- Pasco County Public Transportation 4
- The PCPT Transit Infrastructure Guidelines Manual 4
- The Purpose of the Manual 4
- PCPT Service Map 5

Bus Stop Design Guidelines 6
- Bus Stop Types 6
- Standard Local Bus Stops 7
- Major Local Bus Stops 8
- Superstops/Transfer Centers 9
- Summary Features for Existing Bus Stops 10
- Summary of Features for Proposed/New Bus Stops 11
- Bus Stop Placement 12
- Bus Route Spacing 12
- Bus Stop Spacing 13
- Bus Stop Location 14
- Bus Stop Location Considerations 15
- Bus Stop Dimensions 16
- Bus Stop Layout 17
- Minimum Road Side Clear Zone Requirements for Bus Stop Benches 18
- Bus Shelter Style 19
- Bus Shelter Design 20
- Bus Shelter Placement 22
- Bus Pull-Out Bays 23
- Bus Bulbs 24
- Pavement Composition 25
- ADA Accessibility Guidelines 27
- Bus Stop Infrastructure Elements 30
- Bus Stop Signpost Design & Placement 31
- Bench Placement 33
- Curb Ramps 34
- Information Kiosks/Displays 35
- Bicycle Storage 36

Table of Contents (continued)

Bus Design Guidelines 37
- Bus Vehicle Dimensions 37
- Bus Turning Template 38
- Vertical & Horizontal Clearance for Buses 39
- Intersection Design for Bus Turns 40
- Bus Turnarounds 41

Transit-Oriented Development Guidelines 42
- Characteristics 42
- Location of Parking 43
- Building Location & Design 43
- Clustered Development & Dense Street Corners 43
- Land Use & TOD 44
- Pedestrians, Bicycling, & Transit 45

Glossary & References 46

References 49

Introduction

Pasco County Public Transportation

In Pasco County, fixed-route motorbus and para-transit services are provided by the Pasco County Board of County Commissioners through Pasco County Public Transportation (PCPT). The system operates 11 fixed transit routes that serve West Pasco, Dade City, and Zephyrhills, Monday through Friday from about 5:00 a.m. to 8:00 p.m. To provide further intermodal connectivity, PCPT has implemented a "bikes on buses" program. The system also provides a connection to the transit systems in Pinellas and Hillsborough Counties. For more information about PCPT services, go online to http://www.pascocountyfl.net/menu/ptindex.htm.

The PCPT Transit Infrastructure Guidelines Manual

Pasco County Public Transportation has developed a Transit Infrastructure Guidelines Manual to provide design standards and guidelines for bus stops and other transit-supportive infrastructure elements throughout its service area. The manual provides specifications and physical design criteria in a primarily graphic format. Some of the criteria are standard in nature for application to specific bus stop types, while other design guidelines enable more flexibility to allow particular infrastructure elements to adapt to the surrounding character and environment of the area(s) being served.

The Purpose of the Manual

In creating this manual, PCPT is endeavoring to fulfill a number of goals related to the provision of its transportation services throughout Pasco County. Among these goals are the following:

- Improve the level and quality of transit-supportive infrastructure throughout Pasco County;
- Improve operation of and access to multi-modal transportation services;
- Promote safety & security on transit vehicles and at stops;
- Increase the comfort and satisfaction of existing system patrons;
- Improve the overall attractiveness of transit as a commute alternative;
- Promote local government and private sector partnerships; and
- Coordinate land use with the provision of transportation services.

With the continued improvement of the transportation services that it provides, PCPT wants to keep ensuring the satisfaction of its current riders, while making the system more attractive to discretionary riders throughout Pasco.

A PCPT bus on US Hwy 19.

Introduction (continued)

PCPT Service Map

The two graphics included on this page illustrate the PCPT service areas in East and West Pasco County. The small circled numbers shown throughout the maps represent the locations of specific major activity centers.

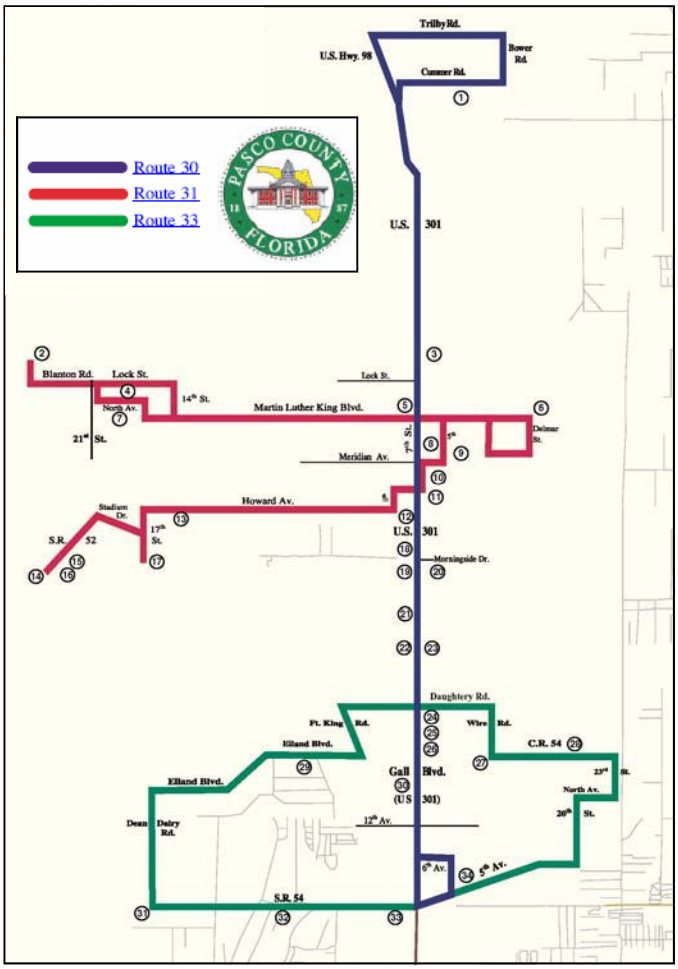

East Pasco County Area System Map.

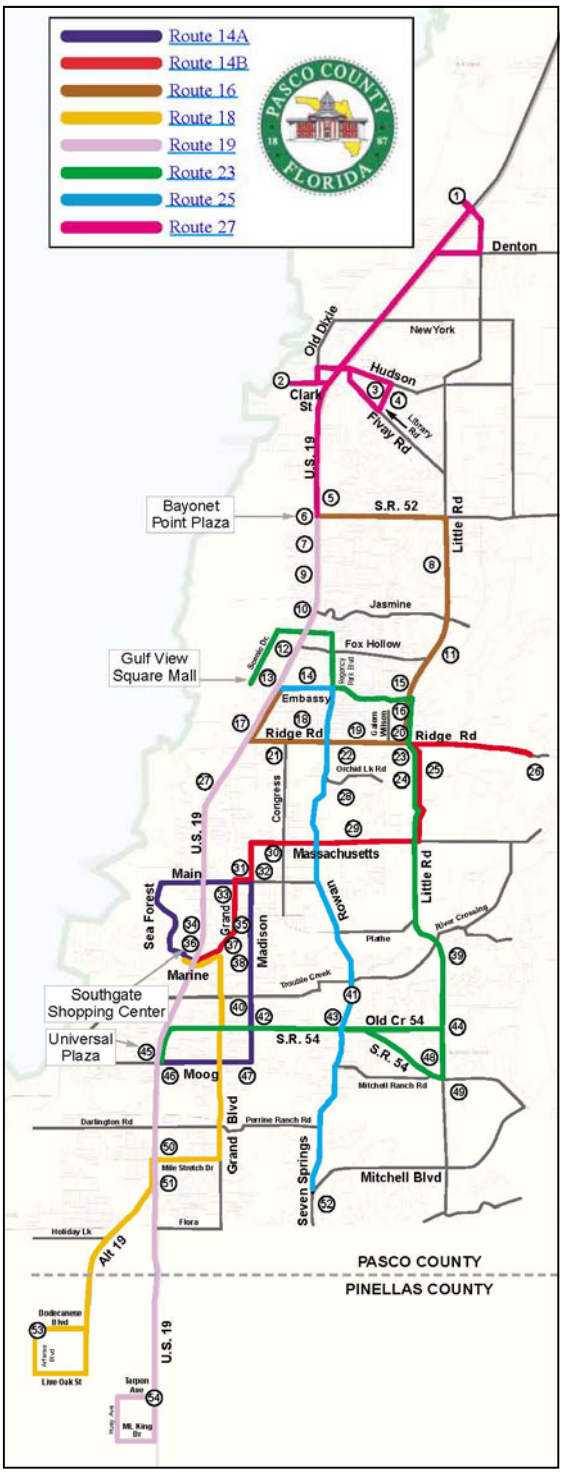

West Pasco County Area System Map.

Bus Stop Design Guidelines

Bus Stop Types

Depending on location, ridership, and adjacent land uses, bus stops can vary in terms of size and included infrastructure elements. A standard local stop may consist of only a signpost and bench, while a larger "superstop" may add one or more shelters, trash receptacles, and other infrastructure elements to its inventory of available amenities.

PCPT currently utilizes three basic types of bus stops for the purpose of establishing specific standards and guidelines for which infrastructure elements can be used or added at any given bus stop based on passenger activity and service design. These three types of bus stops are:

- Standard Local Bus Stops;
- Major Local Bus Stops; and
- Superstops.

In addition, PCPT now utilizes or will implement in the future transfer centers, intermodal facilities, and park-and-ride facilities within its system structure. Since these higher-level types of facilities require increased transit infrastructure investments and will be less standardized in terms of layout and design, they will be specified and designed on an individual basis and, therefore, are not specifically addressed in this manual. Nevertheless, it is important to recognize that many of the infrastructure and design considerations included in this manual have application to them, as well.

The primary factor in assessing what type of bus stop should be implemented at a particular location is the amount of passenger volume activity that typically occurs there. The potential for bus passenger activity at any particular stop can be influenced by a number of variables, including the population density of the surrounding area, the intensity and types of nearby land uses, the accessibility and design of the site, and the condition of adjacent traffic facilities. In addition, transit service design can impact stop design requirements, such as when route structure necessitates the transfer of passengers between routes.

Standard Local Bus Stops

Standard Local Bus Stops are defined as stops that have the lowest passenger boarding/alighting volumes. These stops account for most of PCPT's service stops and provide for system access over a large geographical area. The essential infrastructure necessary for a Standard Local Bus Stop is a signpost that displays the route numbers that serve the stop. Also essential are curb cuts and sidewalk connections in order to satisfy pedestrian and ADA requirements.

Additional infrastructure improvements may be made to these stops based upon community and/ or private sector investments.

The following general system characteristics describe a Standard Local Bus Stop:

- Daily activity of less than 25 passengers per day
- Consistently spaced with greater distance in spacing (0.5 to 1.0 miles) in rural areas
- Orientation, design, and minimum stop requirements related to adjacent land uses and passenger activity
- Orientation to intersection (near-side, far-side, mid-block)
- Visibility and relationship to roadway type

The following criteria are used to designate a Standard Local Bus Stop:

- Right-of-way availability
- Pedestrian access
- ADA accessibility
- Safety and security of patrons
- Bus route operational characteristics
- Stop spacing
- Land use trip generation
- Customer requests
- Bus operator recommendations
- Routing design and turning requirements

The following infrastructure elements are essential for a Standard Local Transit Stop:

- Signpost
- Pedestrian/ADA access compatibility (curb cut, sidewalk connections)

The following infrastructure elements are optional for a Standard Local Transit Stop. These elements shall not conflict with essential elements or ADA regulations.

- Map/schedule information
- Bench
- Stop lighting
- Trash receptacle
- Bicycle storage

See page 18 for the minimum road side clear zone requirements for bus stop benches.

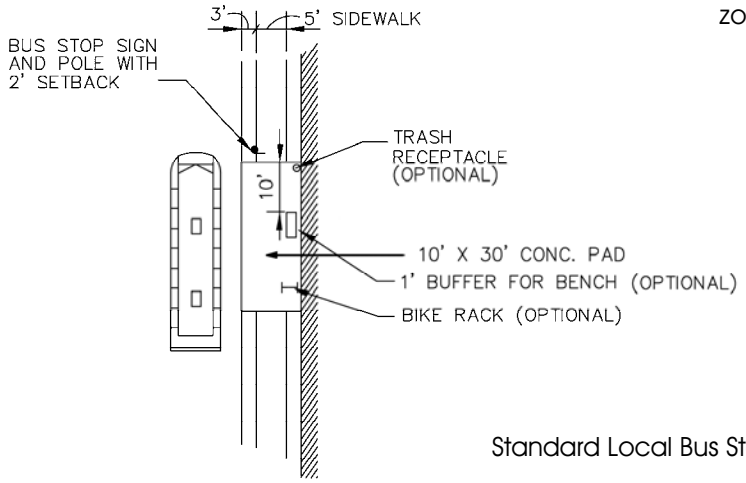

Standard Local Bus Stop, Scale: NTS.

Major Local Bus Stops

Major Local Bus Stops are simply Standard Local Transit Stops with higher passenger boarding/ alighting volumes. These stops typically are located at major activity centers or where PCPT routes intersect. The essential infrastructure elements necessary for a Major Local Bus Stop are a signpost, pedestrian/ADA accessibility, shelter, bench, and trash receptacle.

Once again, additional infrastructure improvements may be made to these stops based upon community and/or private sector investments.

The following general system characteristics describe a Major Local Bus Stop:

- Daily activity of between 25 to 50 passengers per day
- Transfer activity between PCPT routes
- Greater density of adjacent development
- Proximity to major activity centers
- Orientation, design, and minimum stop requirements related to adjacent land uses and passenger activity
- Orientation to intersection (near-side, far-side, mid-block)
- Visibility and relationship to roadway type

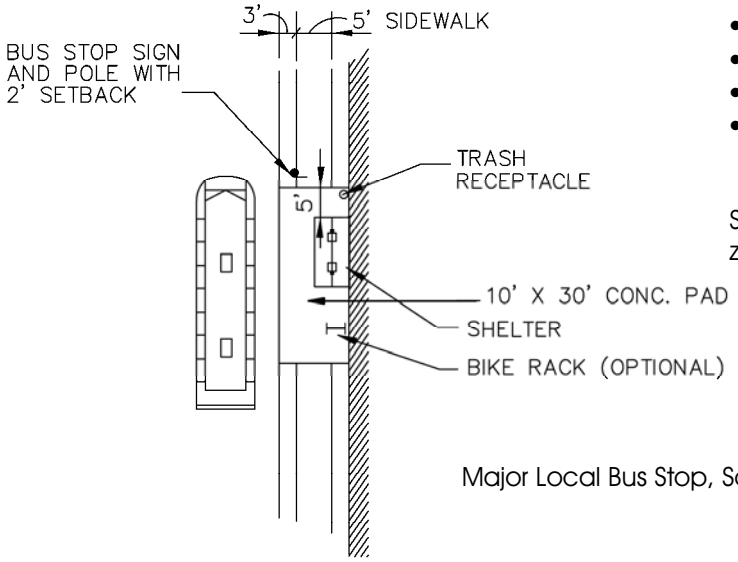

Major Local Bus Stop, Scale: NTS.

The following criteria are used to designate a Major Local Bus Stop:

- Passenger volumes
- Right-of-way availability
- Pedestrian access
- ADA accessibility
- Safety and security of patrons
- Bus route operational characteristics
- Stop spacing
- Land use trip generation
- Customer requests
- Bus operator recommendations
- Routing design and turning requirements

The following infrastructure elements are essential for a Major Local Transit Stop:

- Signpost
- Pedestrian/ADA access compatibility (curb cut, sidewalk connections)
- Shelter (standard size)
- Bench
- Trash receptacle

The following infrastructure elements are optional for a Major Local Transit Stop. These elements shall not conflict with essential elements or ADA regulations.

- Map/schedule information
- Stop lighting
- Bicycle storage
- Information kiosk
- Bus bay (where allowable by street network and right-of-way is secured)

See page 18 for the minimum road side clear zone requirements for bus stop benches.

Superstops/Transfer Centers

A Superstop/Transfer Center is a larger bus staging area that serves as a nexus for a number of PCPT routes. Among PCPT's basic stop types, the Superstop/Transfer Center experiences the highest passenger boarding/alighting volumes. These stops are located at major activity centers and serve as major transit system destinations/transfer stations. Ideally, a Superstop/Transfer Center will reflect the character of the community or area which it serves. A Superstop/Transfer Center must have all of the essential infrastructure elements of a Major Local Bus Stop. Other essential infrastructure items include information kiosks, bicycle storage, and landscaping.

The following general system characteristics describe a Superstop/Transfer Center:

- High volume of daily activity (>50 passengers per day)
- Significant transfer activity between PCPT routes
- Highest density of adjacent development
- Adjacent to major activity centers

The following criteria are used to designate a Superstop/Transfer Center:

- Major development trip generator(s)
- Passenger volumes
- Right-of-way availability
- Pedestrian access
- ADA accessibility
- Safety and security of patrons
- Bus route operational characteristics
- Stop spacing
- Land use trip generation
- Customer requests
- Bus operator recommendations
- Routing design and turning requirements

The following infrastructure elements are essential for a Superstop/Transfer Center:

- Signpost
- Pedestrian/ADA access compatibility (curb cut, sidewalk connections)
- Shelter (larger size or multiple)
- Benches/seating area
- Stop lighting (external or in shelter)
- Map/schedule information
- Trash receptacle
- Bicycle storage
- Information kiosk(s)
- Landscaping

The following infrastructure elements are optional for a Superstop/Transfer Center. These elements shall not conflict with essential elements or ADA regulations.

- Telephone
- Automobile parking (should be accounted for in location selection process)
- Bus Bay (where allowable by street network and right-of-way is secured)

Summary of Features for Existing Bus Stops

The table below summarizes the features that are appropriate for implementation at existing bus stops. Five levels of bus stops have been defined, based upon the intensity of daily passenger boardings at the stops.

Feature	***Daily Passenger Boardings***				
	<10	**10-24**	**25-50**	**51-150**	**>150**
Sign and Pole	S	S	S	S	S
Route Designations	S	S	S	S	S
Curb Cut	S	S	S	S	S
Sidewalk Connectivity	S	S	S	S	S
Seating	O	O	S	S	S
Passenger Shelter	-	-	S	S	S
Map/Schedule Information	O	O	O	S	S
Information Kiosk	-	-	O	S	S
Individual Bus Bays	-	-	O	O	O
Park-and-Ride	-	-	-	O	O
Bus Pads	-	-	-	S	S
Lighting	O	O	O	S	S
Bicycle Rack	O	O	O	S	S
Trash Receptacle	O	O	S	S	S
Telephone	-	-	-	O	O
Landscaping	-	-	-	S	S

Note:

S = Standard Feature
O = Optional Feature
- = Not Applicable

Summary of Features for Proposed/ New Bus Stops

The table below summarizes the features that are appropriate for implementation at proposed/new bus stops. Five levels of bus stops have been defined, based upon the types and intensity of land use.

Feature	*Residential Development*		*Non-Residential & Mixed-Use Development*		
	< 250 Units	250+ Units	< 50,000 SF	50,000 - 200,000 SF	> 200,000 SF
Sign and Pole	S	S	S	S	S
Route Designations	S	S	S	S	S
Curb Cut	S	S	S	S	S
Sidewalk Connectivity	S	S	S	S	S
Seating	O	S	O	S	S
Passenger Shelter	O	S	O	O	S
Map/Schedule Information	O	S	O	O	S
Information Kiosk	-	O	-	O	S
Individual Bus Bays	-	O	-	-	O
Park-and-Ride	-	O	-	-	O
Bus Pads	O	S	O	S	S
Lighting	O	S	O	O	S
Bicycle Rack	O	S	O	S	S
Trash Receptacle	O	S	O	S	S
Telephone	-	O	-	O	O
Landscaping	-	O	-	O	S

Note:

S = Standard Feature
O = Optional Feature
- = Not Applicable

Bus Stop Placement

The willingness of people to use public transportation instead of their automobiles is directly dependent on the convenience with which they can access the system. Transit route and stop spacing and location are significant factors in designing for convenient access to public transportation.

Bus Route Spacing

For transit system planning purposes, it is a common rule-of-thumb that people are willing to walk up to one-quarter of a mile to reach a bus stop. Following this general principle, it is logical that transit routes should be spaced no farther than one-half mile apart to provide the greatest coverage to an area. Well-connected, grid street patterns will provide better access to transit lines than will curvilinear streets with few route options.

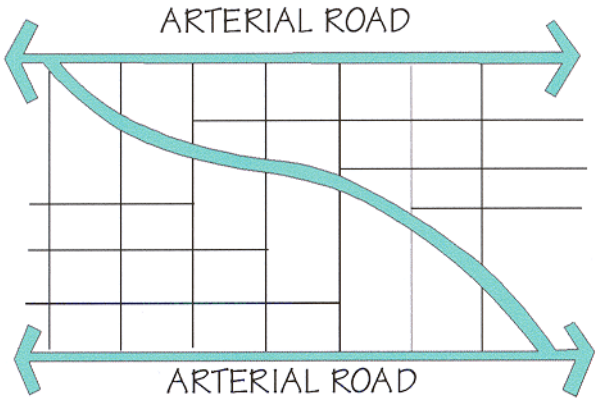

SHORTER WALKING DISTANCES

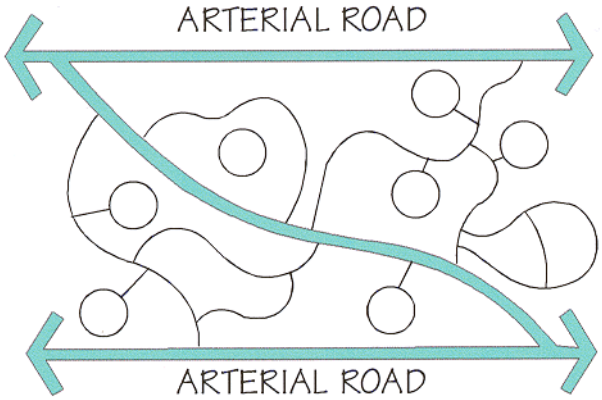

LONGER WALKING DISTANCES

Bus Stop Spacing

Bus stop spacing is an important consideration in the placement of stops. It has a significant influence on a person's decision to utilize transit and also can impact transit vehicle operation and the overall performance of a transit system. Bus stops should be close enough to further reduce walking distance and encourage transit ridership but must be balanced with the increase in travel time due to many closely spaced stops. Available right-of-way, density of the surrounding catchment area, existing and potential ridership in the area, traffic conditions, and route operations/efficiency should all be considered in the spacing of stops.

In high-density urban areas (major employment centers and/or with population densities greater than or equal to 2,000 persons per square mile), bus stops ideally should be spaced at intervals no more than 1,320 feet (1/4 mile) and no less than 600 feet along each route.

In less dense suburban areas (with population densities below 2,000 persons per square mile), bus stops ideally should be spaced at intervals no more then 2,000 feet and no less than 1,320 feet. While these spacing standards are the general rule, exceptions may be made in special circumstances (for example, to accommodate customers with disabilities who might otherwise need to use PCPT demand-response service because they would not be able to access the existing nearest bus stops).

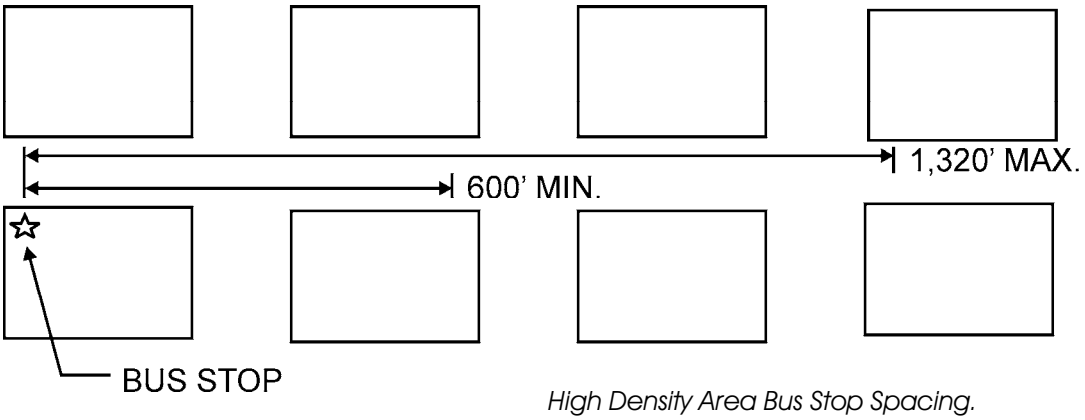

High Density Area Bus Stop Spacing.

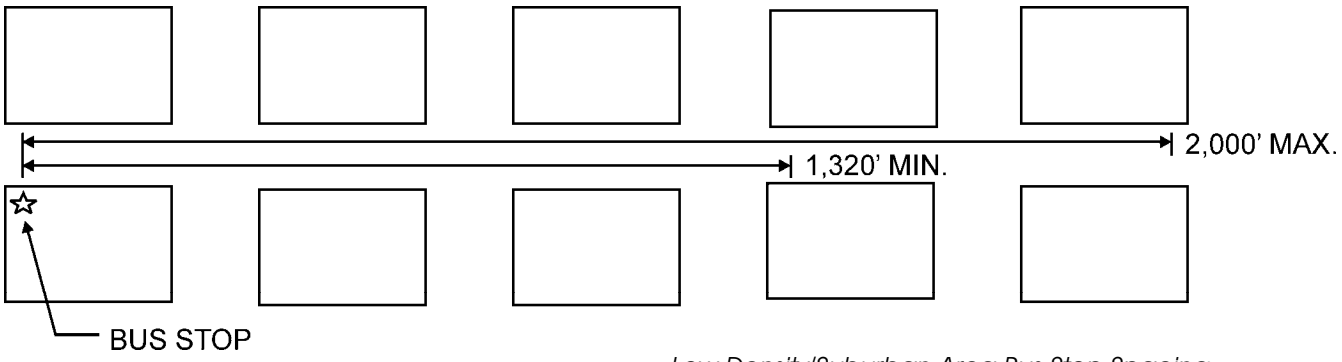

Low Density/Suburban Area Bus Stop Spacing.

Bus Stop Location

The actual location of bus stops can influence the convenience of transit access, which, in turn, can impact ridership. For example, when a large bus cannot efficiently maneuver through a shopping center parking lot, it becomes necessary to locate the bus stop serving that use on the street, rather than at the building entrance. This results in a negative impact to the bus patrons trying to access the shopping center. In cases such as this, if it is not possible (or preferable) to design the parking lot for large bus access, provisions should be made during the site planning process to accommodate pedestrians as they walk between roadside bus stops and building entrances.

Street corners often serve as the best locations for transit stops for the following reasons:

- they naturally attract development;
- they typically are equipped with pedestrian crosswalks; and
- they often provide intersections with two major routes.

Often, however, block lengths are too long to provide convenient walking distances to mid-block land uses. To address this issue, mid-block transit stop locations can be used to provide more direct transit linkage to area land uses.

There are both advantages and disadvantages to the placement of stops at either near side, far side, or mid-block locations. These advantages and disadvantages, along with the land use mix of the area to be served by a transit stop, should be reviewed to ensure a location that will present the most transit riders with the most convenient transit access, while minimizing traffic congestion and safety concerns.

For PCPT, the bus stop location standards are as follows:

- A near-side stop should be used for intersections where the right lane is a through lane.
- A far-side stop should be used for signalized intersections where the right lane is a turn only lane.
- A mid-block stop should be used only in instances where there is a significant distance between intersections.

Bus Stop Location Considerations

Near-Side Intersection

Advantages

- Minimizes interference when traffic is heavy on the far side of the intersection.
- Passengers access buses closest to crosswalk.

Disadvantages

- Conflicts with right turning vehicles are increased.
- Stopped buses obscure curbside traffic control devices and crossing pedestrians.
- Sight distance is obscured for crossing vehicles stopped to the right of the intersection.
- Through lane may be blocked during peak periods by queuing buses.
- Increases sight distance problems for crossing pedestrians.

Mid-Block

Advantages

- Minimizes sight distance problems for vehicles and pedestrians.
- Passenger waiting areas experience less pedestrian congestion.

Disadvantages

- Requires additional distance for no parking restrictions.
- Encourages patrons to cross street mid-block. (Such mid-block crossings can pose additional safety problems.)
- Increases walking distance for patrons crossing at intersections.

Far-Side Intersection

Advantages

- Minimizes conflicts between right turning vehicles and buses.
- Provides additional intersection capacity by making curb lane available for traffic.
- Minimizes sight distance problems on approaches to intersection.
- Encourages pedestrians to cross behind the bus.
- Requires shorter acceleration and deceleration distances for buses.
- Gaps in traffic flow are created for buses reentering the traffic flow at signalized intersections.

Disadvantages

- Intersections may be blocked during peak periods by queuing buses.
- Sight distance is obscured for crossing vehicles stopped to the right of the intersection.
- Increases sight distance problems for pedestrians.
- Conflicts with right turning vehicles from side street can result.
- Rear-end collisions can increase, as motorists may not expect buses to stop after clearing the intersection.

Source: Adapted from Maryland Department of Transportation, "Access by Design: Transit Role in Land Development," September, 1988.

Bus Stop Dimensions

The figure shown below details the typical dimensions for PCPT's on-street bus stops by location of the stop in relation to the intersection.

SCALE: NTS

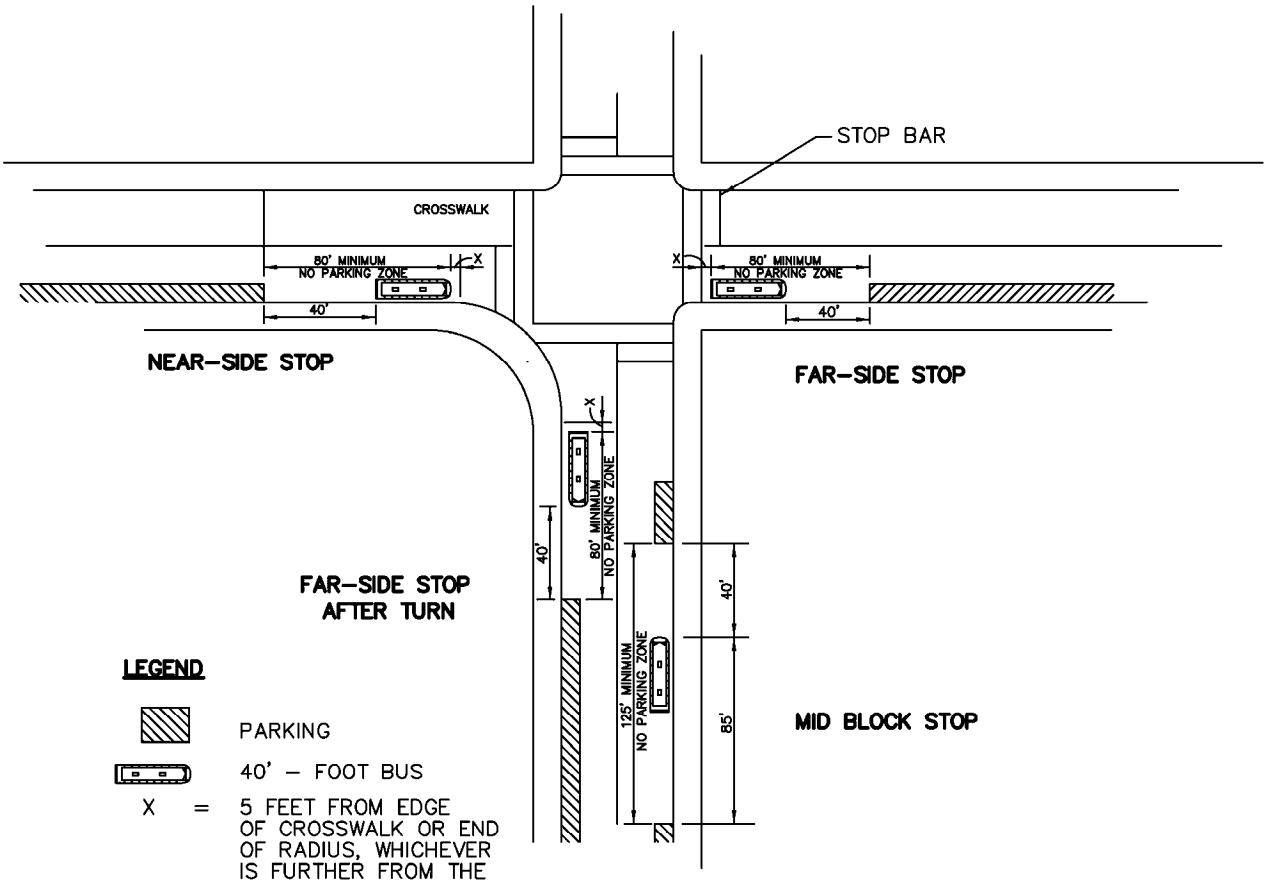

LEGEND

PARKING

40' – FOOT BUS

X = 5 FEET FROM EDGE OF CROSSWALK OR END OF RADIUS, WHICHEVER IS FURTHER FROM THE INTERSECTION

NOTES:

1.) ADD 20 FEET TO BUS STOP ZONES FOR ARTICULATED BUS.

Bus Stop Layout

The first figure below presents the schematic for the typical layout of a PCPT Standard Local Bus Stop, given ideal available space conditions. The second figure shows the layout that should be used for a Major Local Transit Stop in space-constrained locations.

As shown in the diagrams, the standard for the placement of a PCPT bus stop sign is for the sign to be located at a position that would correspond to the front of a bus when it is stopped to board passengers (i.e., near the front door of the bus). This will help passengers understand where they should stand to wait for a bus; it also will provide a visual cue for bus operators to help them position their vehicles at the stop.

See page 18 for the minimum road side clear zone requirements for bus stop benches.

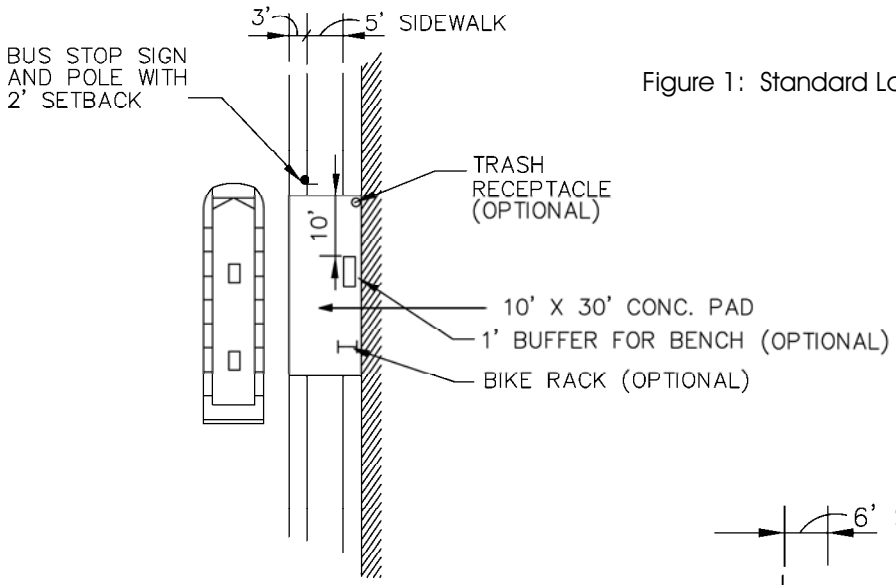

Figure 1: Standard Local Bus Stop, Scale: NTS.

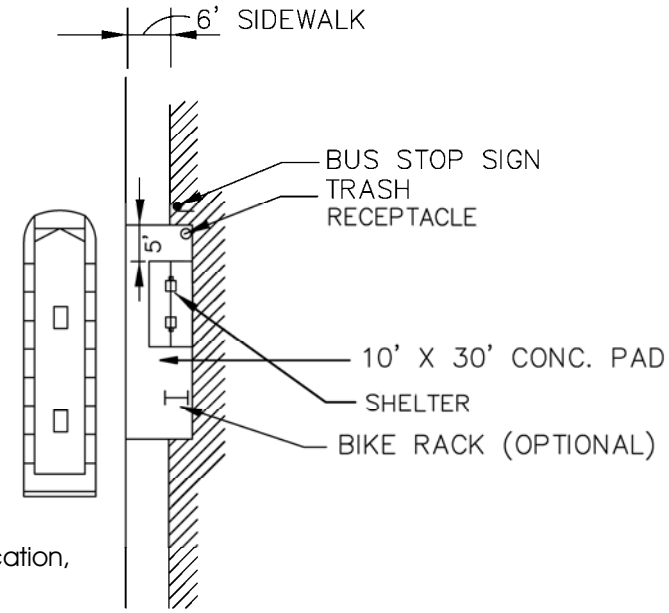

Figure 2: Major Local Bus Stop in ROW-Constrained Location, Scale: NTS.

Minimum Road Side Clear Zone Requirements For Bus Stop Benches

The table below presents the minimum road side clear zone requirements for bus stop benches based on the 2002 FDOT Green Book. These clear zone standards should be utilized for the implementation of other bus stop infrastructure elements, as well, such as shelters, bike racks, and trash receptacles.

	Posted Speed Limit							
Type Road	**25 or Less**	**30**	**35**	**40**	**45**	**50**	**55**	**60 or Higher**
Rural (No Curbing) Local (Residential)	6 ft	6 ft	N/A	N/A	N/A	N/A	N/A	N/A
Rural (No Curbing) Collector	N/A	10 ft	10 ft	10 ft	14 ft	14 ft	18 ft	18 ft
Rural (No Curbing) Arterial	N/A	14 ft	14 ft	14 ft	18 ft	18 ft	24 ft	30 ft
Urban (Mountable Curb, Not Raised)	4 ft	6 ft	6 ft	6 ft	6 ft	N/A	N/A	N/A
Urban (Non-mountable Raised Curb)	1.5 ft	4 ft	4 ft	4 ft	4 ft	N/A	N/A	N/A

1. Rural and Urban with mountable curb, the dimensions are measured from the edge of the through travel lane to the bench.
2. Urban with non-mountable curb, the dimensions are measured from the face of the curb to the bench.
3. See FDOT Index 300 for curb types. Non-mountable types are D and F, Mountable types A, F, E and Shoulder gutter.
4. Designation of Residential, Collector and Arterial to be taken from the Public Works Road List.
5. Benches shall not block a sidewalk or intersection site distance.

Bus Shelter Style

The preferred shelter style selected for implementation by Pasco County and PCPT incorporates a cantilever design with a standing seam hip roof, as shown in the photograph below. The preferred material for the shelter and roof is anodized aluminum to increase the structure's wear and corrosion resistance. However, all materials utilized in the construction of the shelter must meet or exceed all Pasco County and State of Florida minimum requirements for construction, especially those related to hurricane code specifications. The preferred color of the shelter and roof is forest green (PCPT should be contacted for specifications regarding this color).

All shelters that are implemented throughout the PCPT service area will include bench seating that is incorporated into the shelter structure. The preferred material for the bench is recycled plastic materials. Similar to the case for the shelter, the bench materials must meet or exceed all Pasco County and State of Florida minimum requirements for construction, especially those related to hurricane code specifications. The preferred color of the bench is gold (PCPT should be contacted for specifications regarding this color, as well).

Tempered impact glass panels should be used in the construction of a shelter that meet or exceed code requirements. These panels also should be coated or covered with a tinted protective film that will help minimize shattering while also offering some shade to waiting patrons. Shelters also should have lighting incorporated into their design, with solar power panels being the preferred energy source for the lighting.

At primary transfer locations, consideration should be given to the inclusion of a schedule holder in the shelter. Opportunities for advertising on shelters may also warrant consideration in certain applications.

An example of the preferred shelter style. (Slimline Series shelter photograph courtesy of Brasco International, Inc.)

Bus Shelter Design

The dimensions for a standard PCPT shelter will be approximately 5-feet wide by 10-feet long, as indicated in the schematics shown below.

In the case of a large shelter, such as that which may be implemented at a Superstop, the basic design measurements will be 6-feet wide by 18-feet long. Depending on specific application, however, these dimensions may be modified to accommodate local conditions and ridership demand.

Specifications:

Dark Bronze Anodized Aluminum Structure

1/4" Bronze Tinted Tempered Safety Glazing

Standing Seam Bronze Hip Roof With Fascia/Gutter System

Partial Bronze Aluminum Bench Backrest

Schedule Holder (Location as Shown)

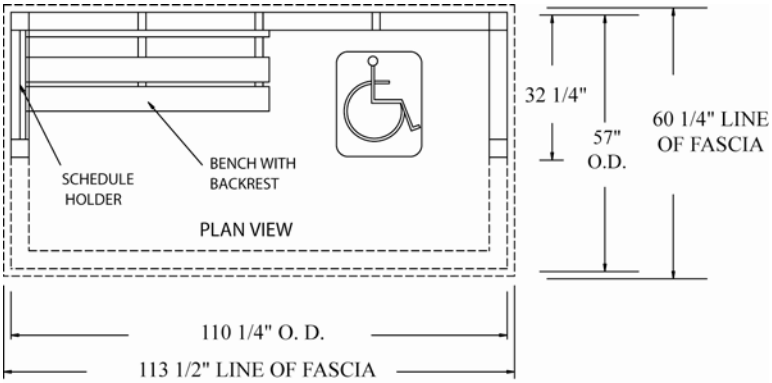

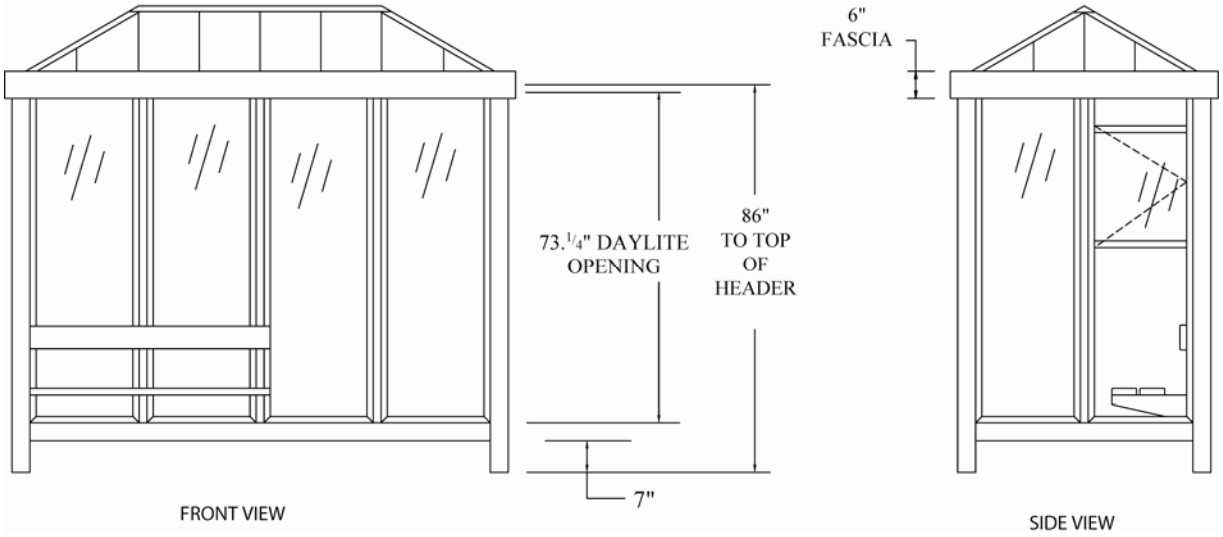

Schematics courtesy of Brasco International.

Bus Shelter Design (continued)

The schematics below illustrate the dimensional standards for PCPT's large shelter design.

Specifications:

Bronze Anodized Aluminum Structure

1/4" Bronze tempered Safety Glazing

Standing Seam Aluminum Hip Roof with Fascia/Gutter System

Full Length Bench With Backrest - Recycled Grey Plastic Slats and Mid-Section Arm Rest

Schedule Holder (Location As Shown)

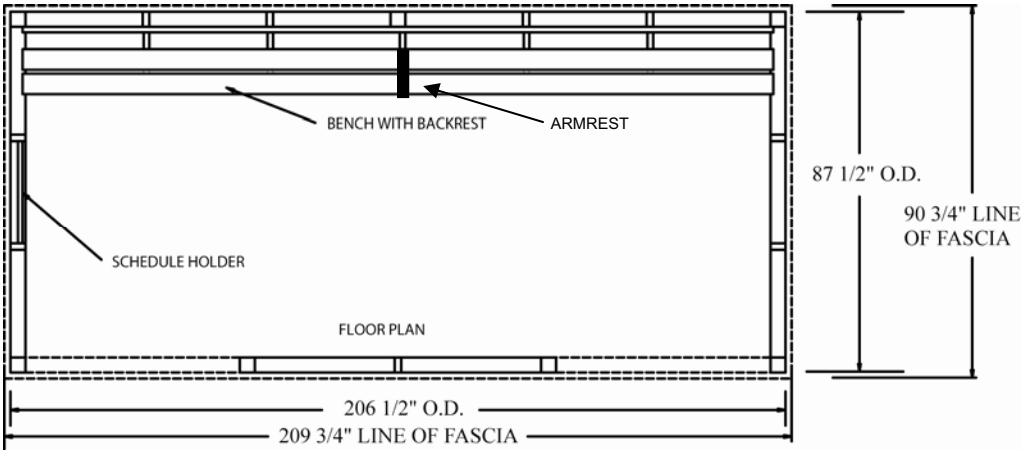

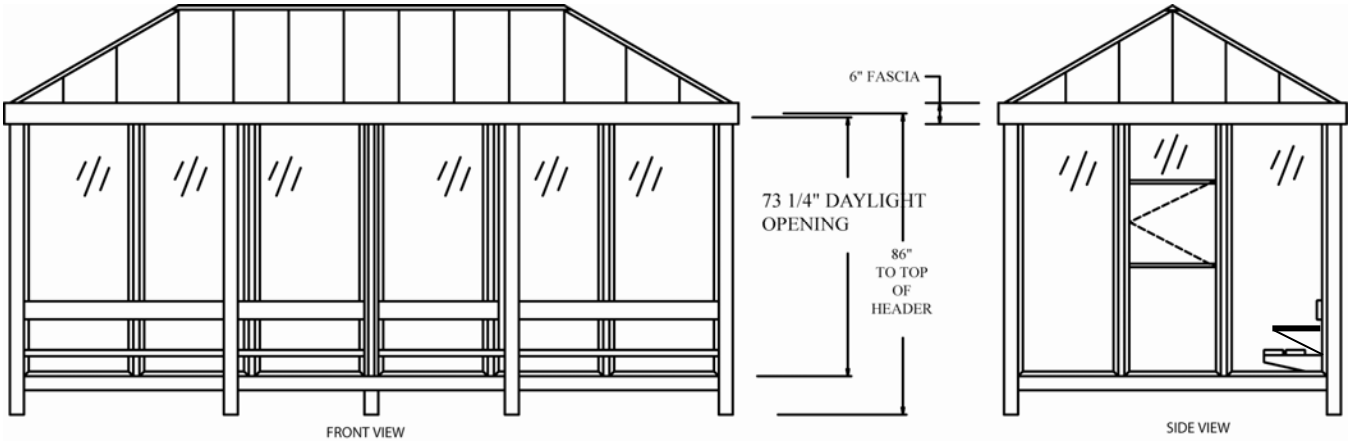

Schematics courtesy of Brasco International.

Bus Shelter Placement

The figures below present the design criteria for the placement of a PCPT passenger shelter (and selected related infrastructure) at a bus stop. There are two cases shown. The first represents the standard for the primary PCPT bus stop design, which is based on the predominance of 5-foot sidewalk widths (with 3-foot setbacks) throughout Pasco County. The second case illustrates the layout that should be utilized for locations with space constraints. In either case, the minimum shelter setback from the curb will be four-and-one-half feet. In locations with sufficient right-of-way available, however, the desired shelter placement should include a setback of at least six feet.

See page 18 for the minimum road side clear zone for bus stop benches.

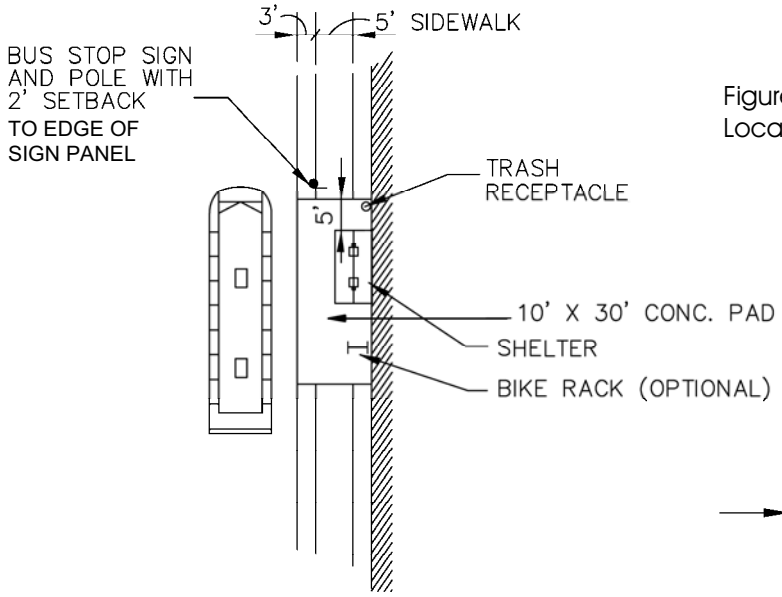

Figure 1: Major Local Bus Stop in Typical Location, Scale: NTS.

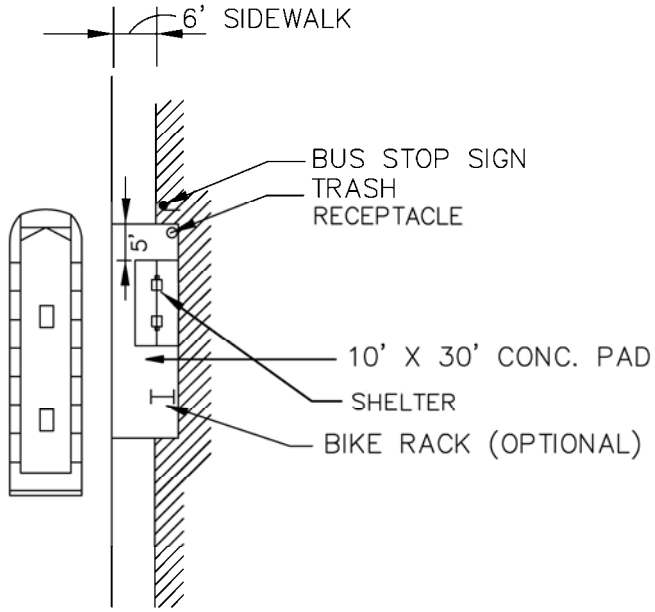

Figure 2: Major Local Bus Stop in ROW-Constrained Location, Scale: NTS.

Bus Pull-Out Bays

PCPT bus stops that are located on roads with large traffic volumes and have consistently high ridership, or otherwise need longer dwell time, are candidates for bus pull-out bays. Pull-out bays enable safe passenger loading and unloading without causing traffic delays.

The figures below detail the design specifications for a PCPT bus pull-out bay. PCPT's standard policy for bus pull-out bays is that they will be implemented at far-side locations on streets with a speed limit of 45 mph or greater. This standard is reflected in the first figure. The second figure provides the actual design dimensions for a typical PCPT bus pull-out bay. In the future, one potential application for bus pull-out bays that PCPT will consider is the implementation of a pull-out bay on a high speed corridor that is utilizing signal priority for Bus Rapid Transit service.

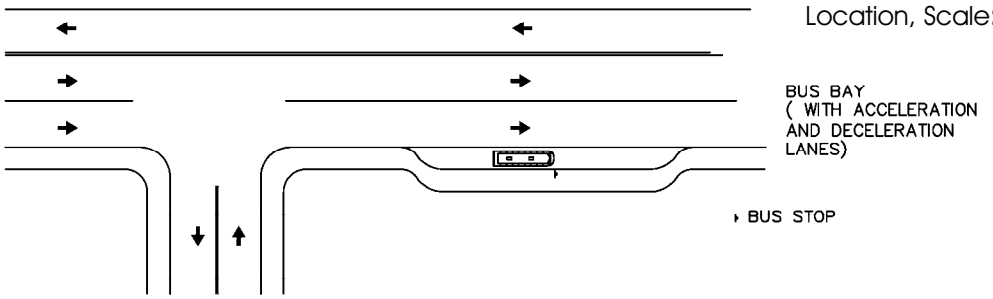

Figure 1: Preferred Bus Pull-Out Bay Location, Scale: NTS.

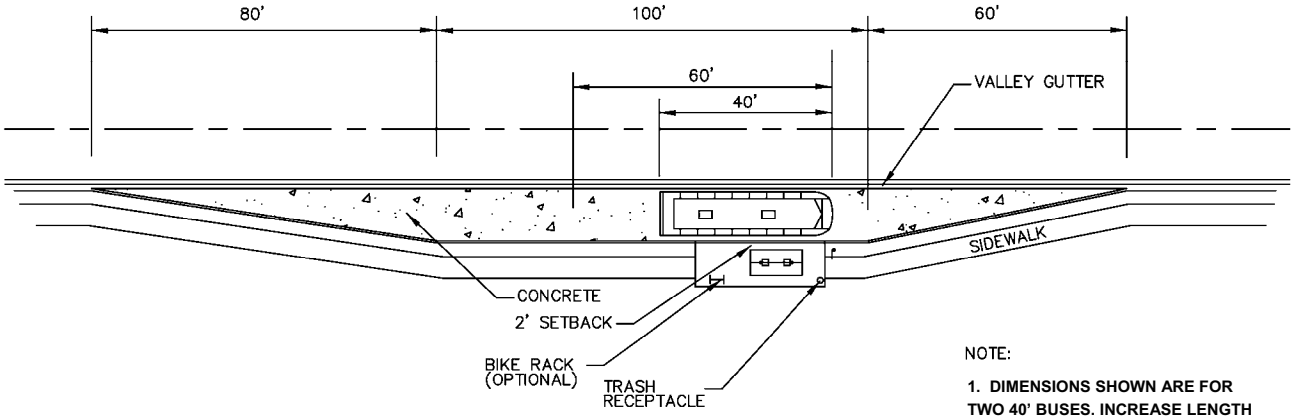

NOTE:

1. DIMENSIONS SHOWN ARE FOR TWO 40' BUSES. INCREASE LENGTH OF BUS BAY BY 50' FOR EACH 40-FOOT BUS EXPECTED TO BE AT THE STOPS SIMULTANEOUSLY.

Figure 2: Bus Pull-Out Bay Design, Scale: NTS.

Bus Bulbs

A bus bulb, also called a "nub" or "curb extension," is a section of sidewalk that extends from the curb of a parking lane to the edge of the through lane and is used as a bus stop. This protruding section of sidewalk enables a bus to stop in the traffic lane rather than having to weave into the parking lane to serve a curbside stop. Bus bulbs not only provide more space for waiting passengers and passing pedestrians, they also provide room for additional bus stop infrastructure, such as shelters and seating.

The figure below illustrates the typical design dimensions for a PCPT bus bulb.

The following characteristics should be used to help identify potential locations for bus bulb implementation:

- High pedestrian activity;
- Crowded sidewalks;
- Streets with lower traffic speeds and/or volumes;
- On-street parking;
- Pedestrian crossing issues; and
- Bus stops in travel lanes.

In addition, PCPT's preferred location for the implementation of a bus bulb shall follow the standards discussed on page 14.

Bus Bulb Placement and Design,
Scale: NTS.

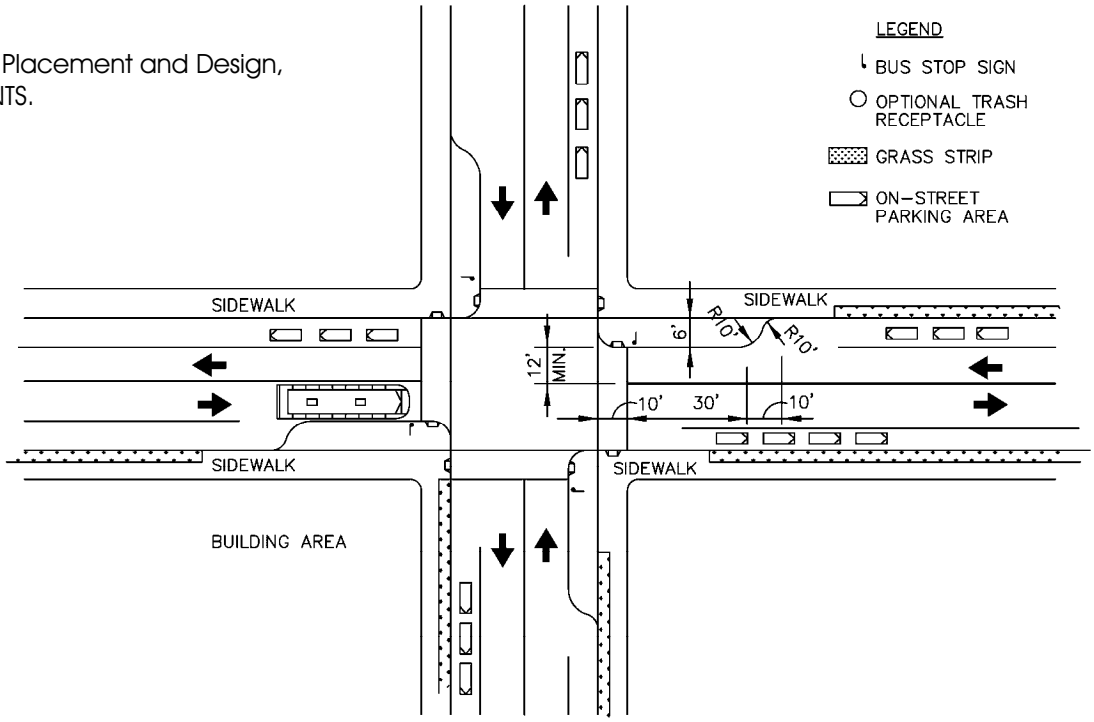

Pavement Composition

Roadway pavements must be able to withstand the axle loads that PCPT buses apply on a regular and repetitive basis. Areas of particular concern are those that accommodate bus starts, stops, and turns because of the increased loads associated with these movements. Therefore, the pavement composition of the streets and roadways that are regularly utilized by buses is an important design consideration. The figure below provides various design specifications for pavement composition for three different situational cases. It is important to recognize that exact pavement design will need to be based on particular site-specific characteristics, such as average daily traffic volume and the condition and resistance of the soil at that location.

In the case of the implementation of a bus stop pad, the size of the pad will be an important consideration. Ideally, a pad width of at least 12 feet is desirable. However, 10 feet should be the minimum-acceptable width. The pad's length should be based on the maximum length of the buses that will be accessing the stop, as well as the number of buses that will be using the stop simultaneously.

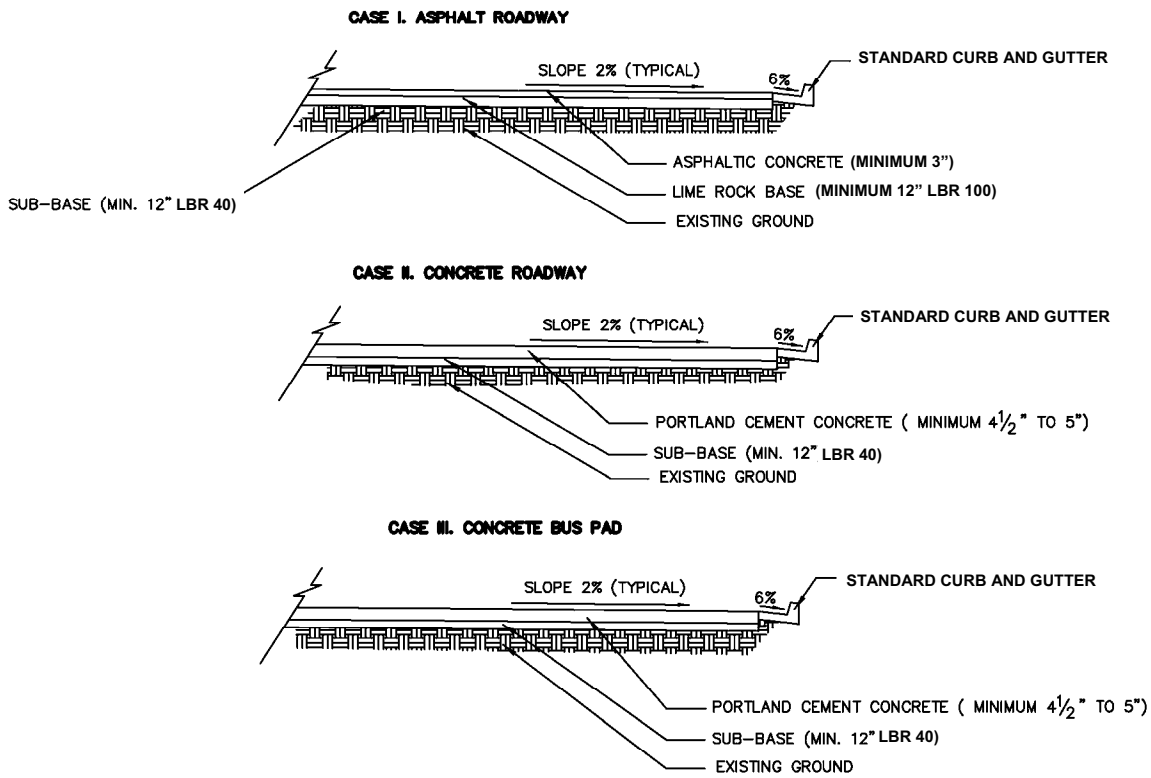

NOTE: *THICKNESS OF LAYERS DEPENDS UPON AVERAGE DAILY TRAFFIC VOLUME AND RESISTANCE VALUE OF EXISTING GROUND. FOR EXACT SPECIFICATIONS, SEE PASCO COUNTY STANDARD SPECS. AND DETAILS.

Pavement Composition, Scale: NTS.

Pavement Composition (continued)

The first figure below shows the typical sidewalk design standards for Pasco County with regard to width, setback, and pavement composition. The second figure details the dimensions and design standards for a basic PCPT bus stop pad. Such a pad should be implemented at locations where the existing infrastructure will not accommodate the design minimum requirements for the dimensions and layout of a PCPT bus stop with shelter.

Typical Sidewalk Cross-Section, Scale: NTS.

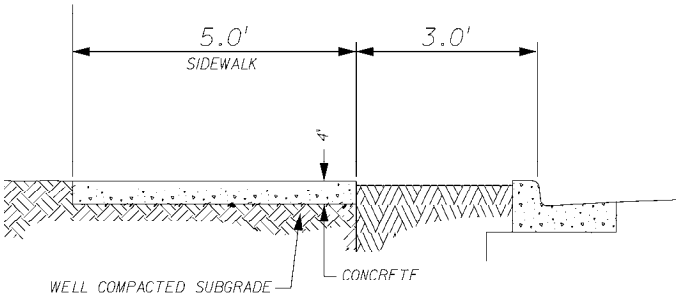

NOTES:

STANDARD CONCRETE PAD

1. 3/16" saw cut joints shall be made 1 1/2" deep on 10' centers.
2. 1/2" expansion joints (preformed joint filler) at all mated concrete joints.
3. Finish texture - broom finish.
4. Wire/fiber mesh, rebar, or other structural materials are required for pad strength.

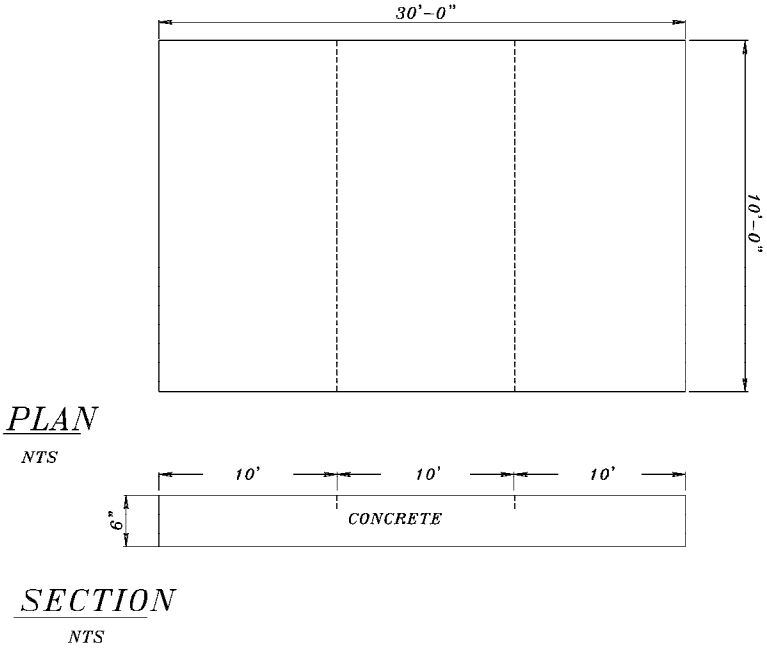

Details of Standard Bus Stop Pad, Scale: NTS.

ADA Accessibility Guidelines

It is important to recognize and understand the effect that the Americans with Disabilities Act of 1990 (ADA) and its guidelines have on bus stop placement, planning, and design. The ADA not only details specific physical dimension requirements, but also seeks to ensure the accessibility of persons with disabilities from their point of origin to their final destination. In the case of a bus transit trip, the parts of this journey for which PCPT has responsibility include barrier-free bus stops and shelters that have connected sidewalks, nearby curb cuts, and other supportive infrastructure; accessible motorbus vehicles that are either low-floor in nature or have operating wheelchair lifts; and available, user-friendly transit information that meets the needs of persons with vision impairments, including stop announcements. Specific guidance on design considerations for persons with disabilities can be found in the document, *ADA Accessibility Guidelines for Buildings and Facilities* (as amended through September 2002). This document is available on-line at the Access Board's web site (http://www.accessboard.gov/adaag/html/adaag.htm). The guidelines include considerations for accessible routes, space and reach allowances, wheelchair lifts, passenger loading zones, and other related issues that have application to transit. Following are brief overviews of some of the ADA-related design issues that must be considered in the development of new bus stops and/or the refurbishing of old ones.

Bus Stop Pads - Bus stops where a lift or ramp is to be deployed should have a firm, stable bus pad with a minimum clear length of 8 feet (measured from the curb or vehicle roadway edge) and a minimum clear width of 5 feet (measured parallel to the vehicle roadway).

Accessible Routes - All bus stops should be connected to streets, sidewalks, or pedestrian paths by an accessible route that has a minimum clear width of 36 inches.

Surfaces - Surfaces must be stable, firm, and slip resistant. Abrupt changes in grade should be avoided and any drop greater than ½ inch or surface grade steeper than 1:20 requires a ramp.

Clear Space - The minimum clear floor or ground space required to accommodate a single, stationary wheelchair and occupant is 30 inches by 48 inches, and may be positioned for forward or parallel approach to an object.

Forward and Side Reach - If the clear floor space only allows forward approach to an object, the maximum high forward reach allowed is 48 inches and the minimum low forward reach is 15 inches. If the clear floor space allows parallel approach by a person in a wheelchair, the maximum high and low side reaches allowed are 54 inches and no less than 9 inches, respectively.

ADA Accessibility Guidelines (continued)

The graphics on this page and the next illustrate some of the ADA-responsive design guidelines and minimum dimensions that must be accounted for in the continuing development of PCPT transit stops.

Standard Width for Wheelchair Clearance in Two Directions, Scale: NTS.

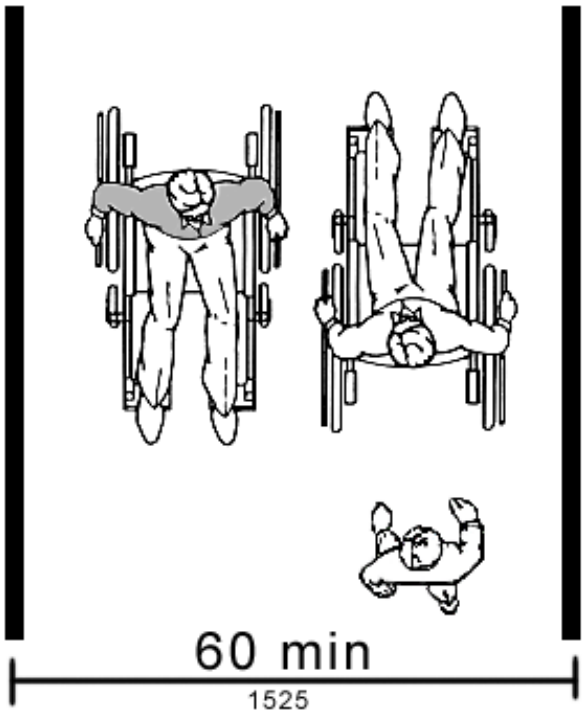

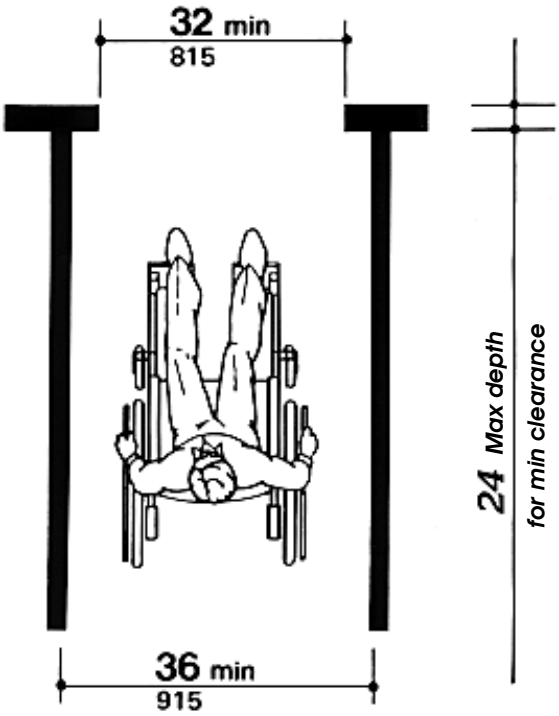

Standard Width for Wheelchair Clearance, Scale: NTS.

ADA Accessibility Guidelines
(continued)

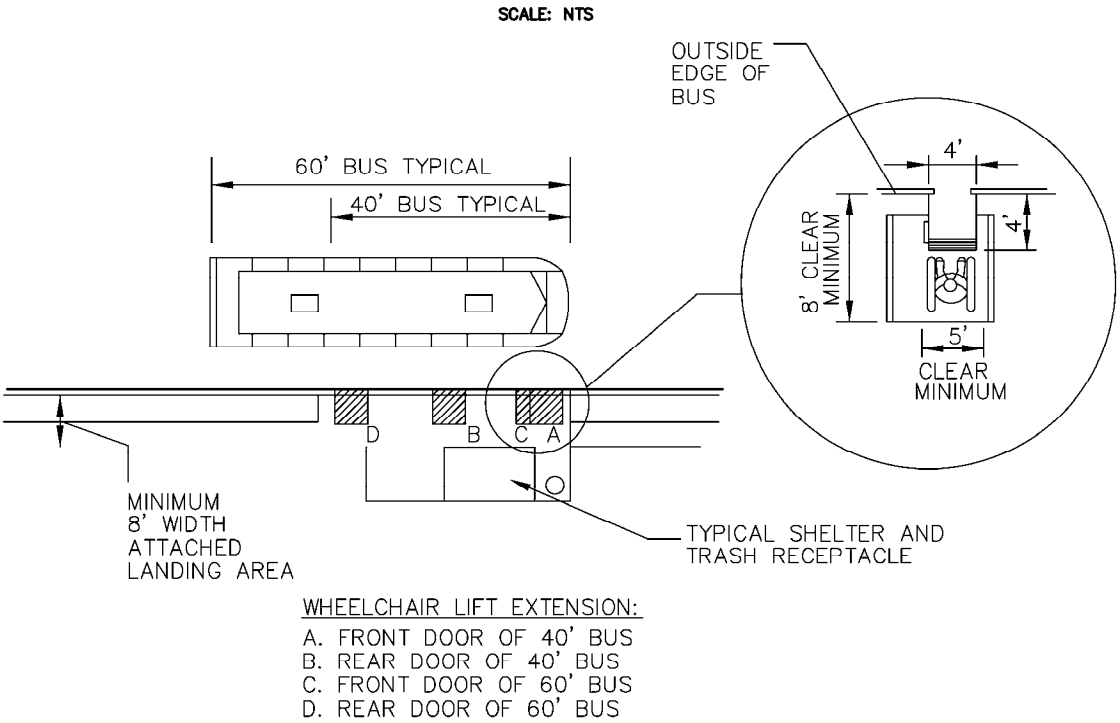

ADA Accessibility Guidelines for Bus Stops. Scale: NTS.

Bus Stop Infrastructure Elements

One method for helping make transit more attractive to potential riders is to improve the level of infrastructure available at PCPT bus stops. A stop with seating and a shelter is much more inviting than a stop that consists of only a signpost. These additional infrastructure elements also will improve the comfort and overall transit experience of current patrons, as well. Depending upon area type, ridership volume and frequency, and bus stop type, the infrastructure found at PCPT facilities may vary. Some of the potential infrastructure elements that can be incorporated at current PCPT bus stops include the following:

- *Signpost*
- *Shelter*
- *Bench*
- *Textured/colored paving*
- *Lighting*
- *Concrete bus pad*
- *Curb ramp*
- *Trash receptacle*
- *Landscaping*
- *Telephone (public and/or customer service)*
- *Newspaper vending machine*
- *System route map and schedule*
- *Information kiosk*
- *Restrooms*
- *Bicycle storage*
- *Water fountain*
- *Automobile parking*
- *Change/token machine*

Bus Stop Signpost Design & Placement

Bus stop signposts are an important element in the provision of PCPT transit service because they help identify the location of stops for both patrons and bus operators, and they also help market PCPT to the general public. These signs should be easily identifiable and easy to read. Signs also should be reflective so that they are visible at night. It also is preferable for signs to be double-sided so that they are visible in both directions.

Where possible, it is important to take advantage of existing infrastructure for signpost-sharing opportunities. This will help limit potential accessible path obstructions and minimize clutter. If a sign is to be installed on its own post, a breakaway type of post should be used. It also is important to ensure that PCPT signs are not obstructed by any trees, buildings, or other signs. Similarly, it should be ensured that the PCPT signs, themselves, do not block any other surrounding signage.

As indicated previously in the discussion of bus stop layout, PCPT's standard for the specific placement of a bus stop sign is for the sign to be located where the front of a bus will be when it is stopped to board passengers. The figure shown below illustrates the typical characteristics for PCPT bus stop signposts. The figures on the following page illustrate additional guidelines for the placement of these signs in relation to position and height requirements.

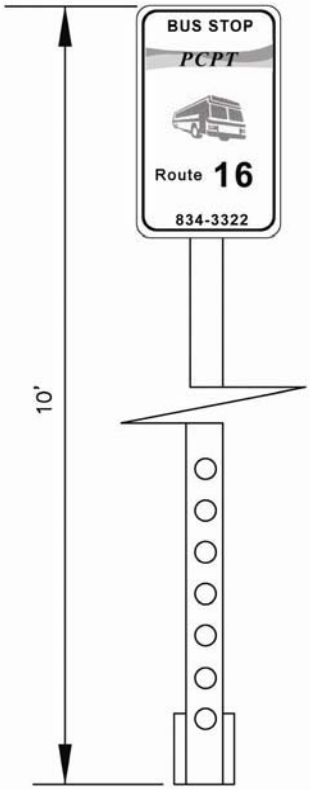

POST

1. SIGN POST BLACK POWDER COAT. 1 3/4" x 1 3/4" x 10' SQUARE TUBING, 14 GAUGE HOLES SHALL BE 7/16" ON 1" CENTERS. POST TO BE PUNCHED ON ALL FOUR SIDES. TO BE TELESPAR 16 D–12–10QP OR EQUAL.

ANCHOR

2.12 GAUGE 2"x2" SINGLE ANCHOR 1/3/4" SIGN POST. TO BE TELESPAR 20F12–PG 30" OR EQUAL. ITEM OFFERED: MFG. UNISTRUT STK.# 20F12–PG

NOTE: IF THE ANCHOR IS TO BE LOCATED WITHIN A CONCRETE AREA A 2 1/2" SQUARE HOLE SHOULD BE LEFT FOR ANCHOR INSTALLATION.

Guidelines for Bus Stop Signpost Design, Scale: NTS.

Bus Stop Signpost Design & Placement (continued)

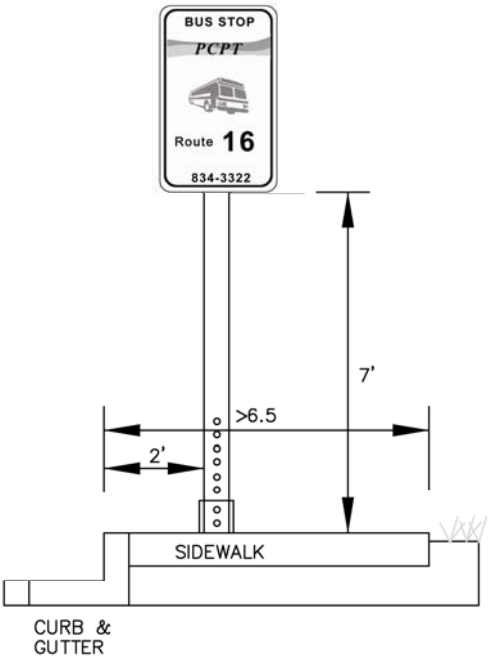

WIDE SIDEWALK
ATTACHED TO CURB

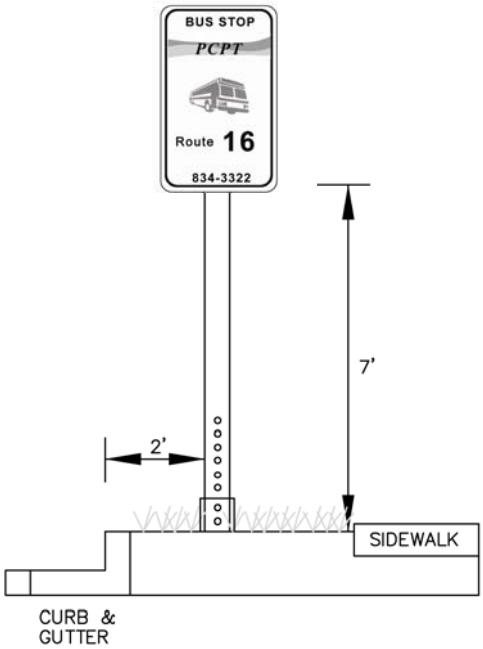

SIDEWALK
DETACHED FROM CURB

Guidelines for Bus Stop Sign Placement, Scale: NTS.

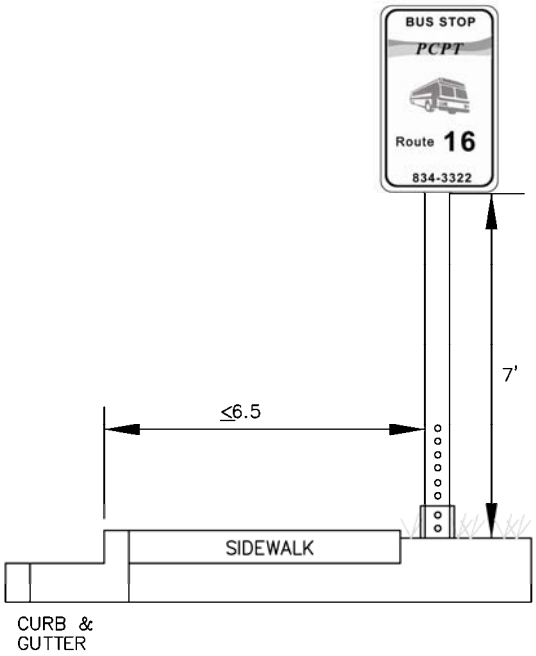

SIDEWALK
ATTACHED TO CURB

Bench Placement

For those PCPT bus stops that require the implementation of a bench or other seating infrastructure, the figure below details the typical layout guidelines related to its placement at a stop.

For information on the minimum road side clear zone requirements for bus stop benches, see the table on page 18.

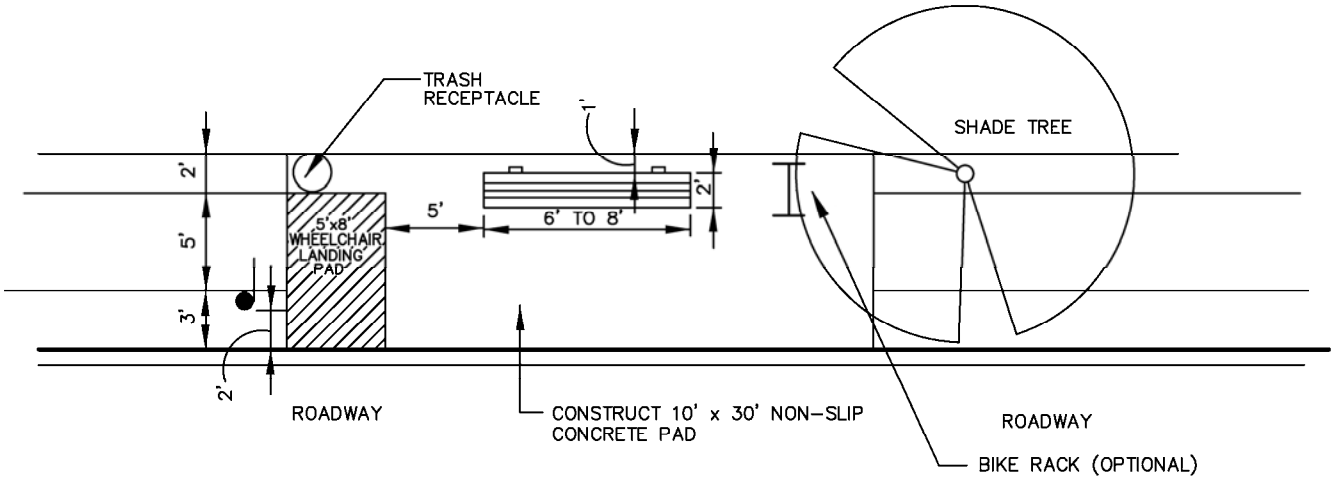

Guidelines for Bench Placement at a Bus Stop, Scale: NTS.

Curb Ramps

The following figure illustrates the design schematic for a typical curb ramp that meets ADA requirements. Every PCPT bus stop should have at least one unobstructed curb ramp located at its nearest intersection to ensure accessibility for persons with disabilities, particularly those using wheelchairs or other mobility aids. Ideally, each closest intersection would have two ADA-accessible curb ramps present — one in each direction to cross either intersecting street.

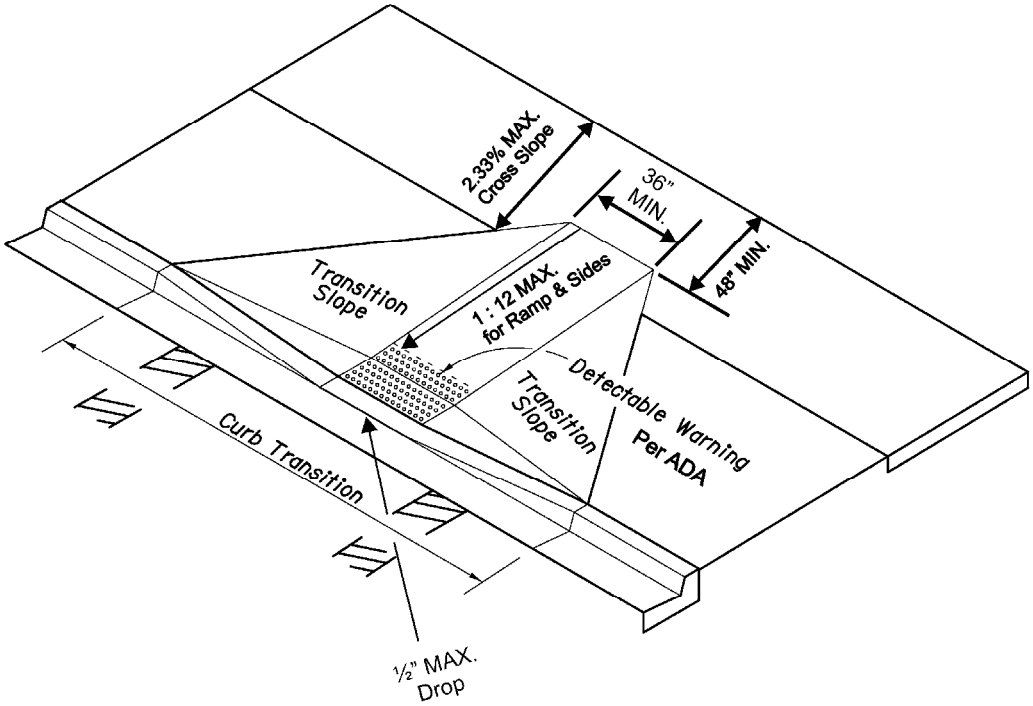

Guidelines for Curb Ramp, Scale: NTS.

Information Kiosks/Displays

The photos below present design examples of passenger information displays and kiosks. These infrastructure items are used to provide route map and schedule information to patrons and are a critical element in helping to facilitate the use of the PCPT system. Typically utilized at Superstops and larger transit facilities, information kiosks/ displays can be implemented at any high-ridership location in the system as warranted.

Examples of Information Kiosks/Displays.

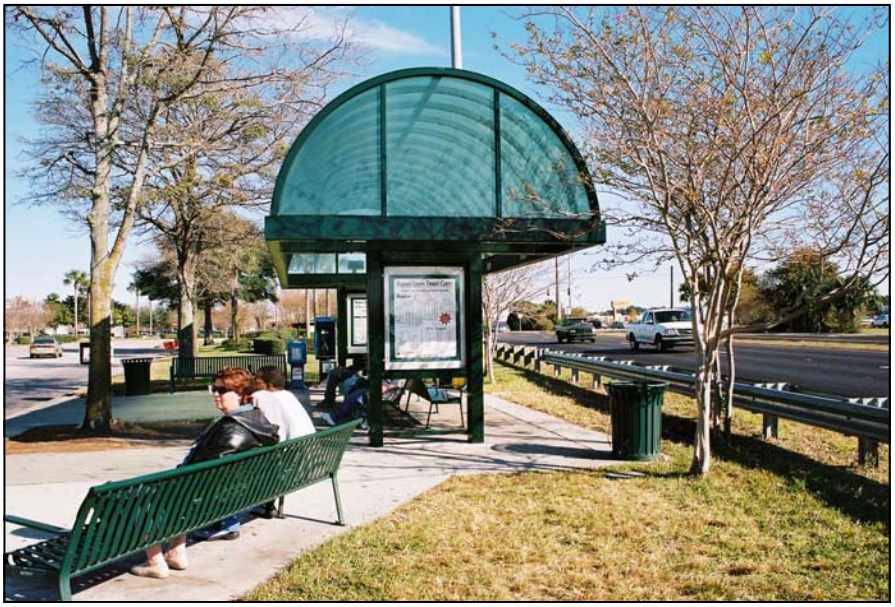

Bicycle Storage

The popularity of the bicycle as an access mode to transit has increased significantly, especially since the implementation of bicycle racks on PCPT buses. As a result, it is important to plan for and accommodate bicycle use in the design of Super-stops/Transfer Centers and other higher-level transit facilities. The following photos depict the standard bicycle rack design that PCPT utilizes at its stops when warranted. Implementation of these racks will help prevent damage to transit facility infra-structure that can occur due to improperly stored and/or secured bicycles.

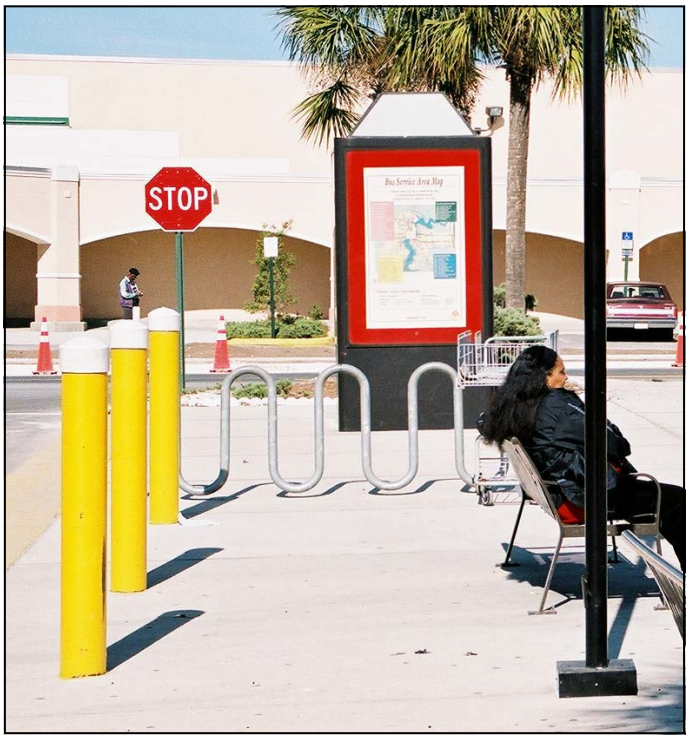

Examples of Bicycle Storage Racks.

Bus Design Guidelines

Bus Vehicle Dimensions

It is important to incorporate the critical dimensions of the buses PCPT currently operates in the design of its transit facilities. The figure below illustrates the typical dimensions of a 40-foot standard motorbus. This represents the basic bus type that will serve as the dimensional design standard for the accommodation of PCPT's motorbus vehicle fleet. Meeting the design requirements for a vehicle of this size will ensure that any smaller buses and vans in the fleet will be accommodated, as well.

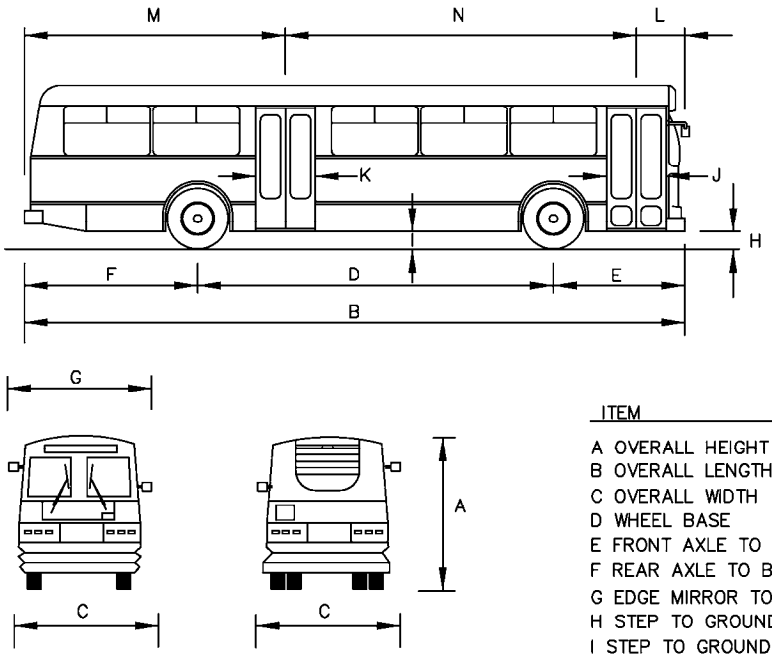

ITEM	
A OVERALL HEIGHT	10' 9"
B OVERALL LENGTH	40' 0"
C OVERALL WIDTH	8' 6"
D WHEEL BASE	23' 9"
E FRONT AXLE TO BUMPER	7' 3–3/4"
F REAR AXLE TO BUMPER	9' 4–3/4"
G EDGE MIRROR TO MIRROR	10' 2"
H STEP TO GROUND, ENTRANCE	1' 5"
I STEP TO GROUND, EXIT	1' 4–1/2"
J CLEAR DOOR OPENING, ENTRANCE	3' 8"
K CLEAR DOOR OPENING, EXIT	3' 8"
L CENTERLINE DOOR TO FRONT	3' 0"
M CENTERLINE DOOR TO REAR	17' 11–1/4"
N CENTERLINE DOOR TO DOOR	19' 8"

NET/GROSS VEHICLE WEIGHT**	
FRONT AXLE	7,420/11,980
REAR AXLE	18,060/24,660
SEATING CAPACITY	51
STANDING CAPACITY	25

NOTES

* VARIES FOR DIFFERENT TYPES OF 40' BUSES

** NET WEIGHT IS " ROAD READY" WITHOUT PASSENGERS
GROSS INCLUDES PASSENGERS.

40-Foot Standard Motorbus, Scale: NTS.

Bus Turning Template

A significant design consideration for transit vehicle movement is the turning radius of a PCPT bus. This especially is the case in the design of internal parking lot roads. The figure below provides the design template for the minimum turning paths of a single-unit, 40-foot motorbus.

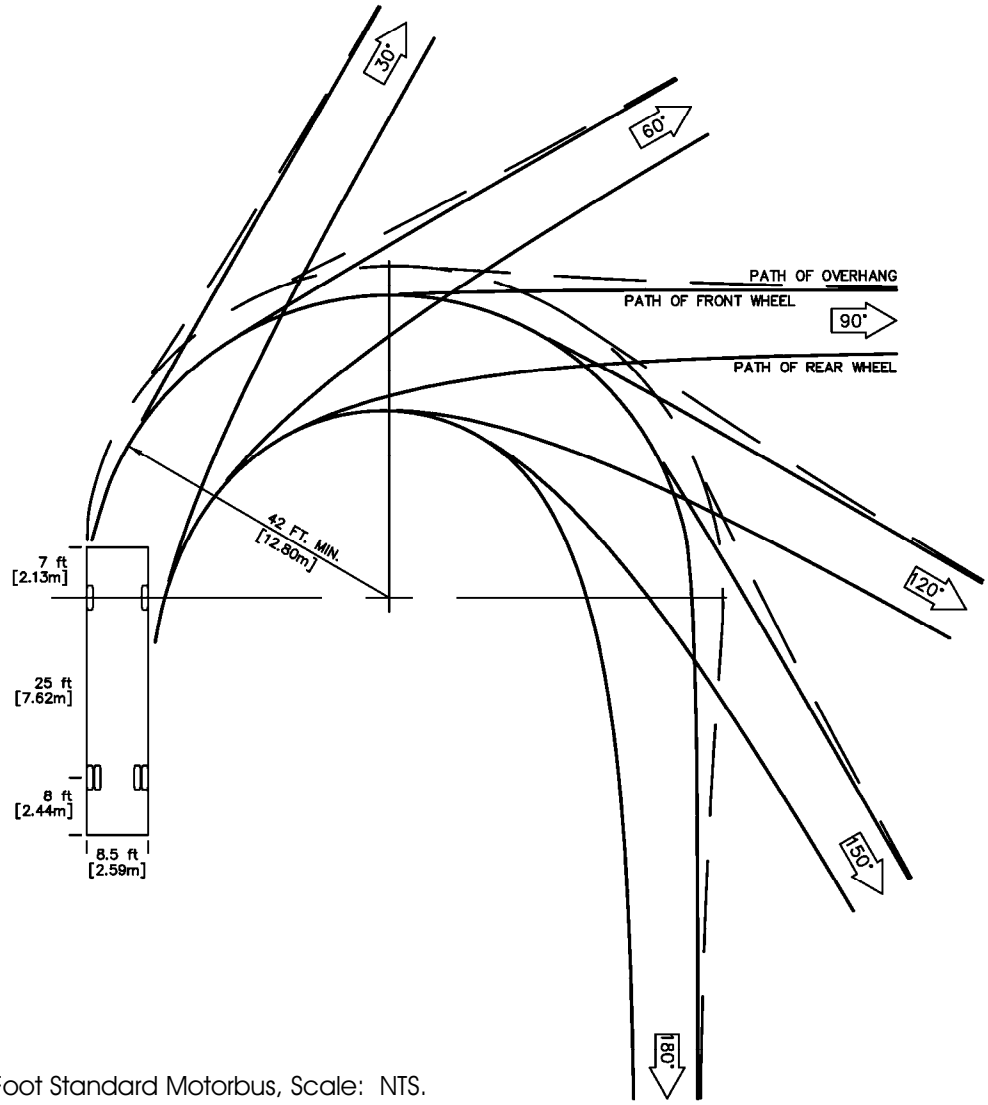

40-Foot Standard Motorbus, Scale: NTS.

Vertical & Horizontal Clearance for Buses

One consideration for incorporating safety into the design of PCPT transit facilities is ensuring that there is adequate clear zone around buses, particularly at bus stops and stations. This includes making sure that there are no obstructions overhead or along the roadside, and that lane widths are adequate to accommodate typical PCPT buses. The following figure presents the vertical and horizontal clearances that are required for PCPT buses at bus stops.

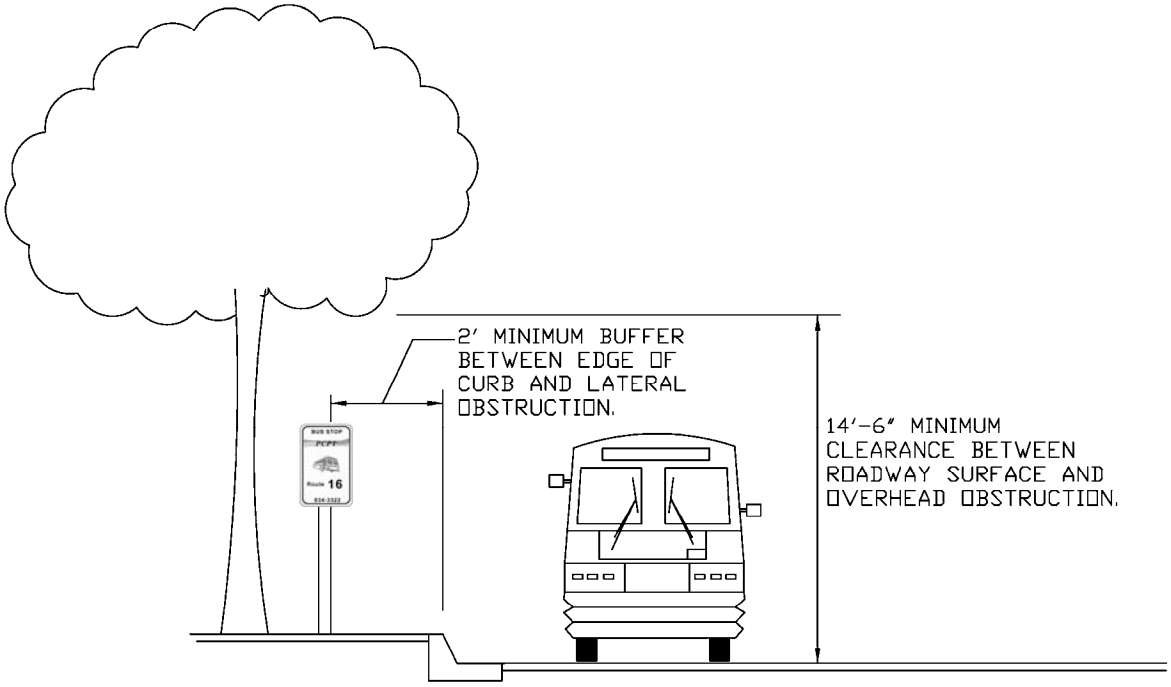

Vertical & Horizontal Clearances for Buses,
Scale: NTS.

Intersection Design for Bus Turns

When a bus makes a right turn at an intersection, the curb radius of the corner can have an impact on the operation of that vehicle. Smaller curb radii tend to slow buses down significantly, reducing travel time. They may also require buses to encroach on an adjacent lane of traffic as they negotiate the turn, creating a potentially hazardous situation. On the other hand, larger turn radii can increase operating speeds, minimize encroachment, and improve the overall level of ride comfort and safety for passengers. The figure shown below illustrates the minimum required curb radii for four different cornering cases based on roadway configurations. As shown, the Pasco County standard for minimum required curb radii is 30 feet in all cases. Use of this specification ensures that there will be no bus encroachment on adjacent lanes. It should be noted, however, that the trade-off for larger curb radii at intersections is an increase in pedestrian crossing distance, which could pose an additional safety concern if not accounted for in overall intersection design (e.g., signal timing, pedestrian signals, median treatments).

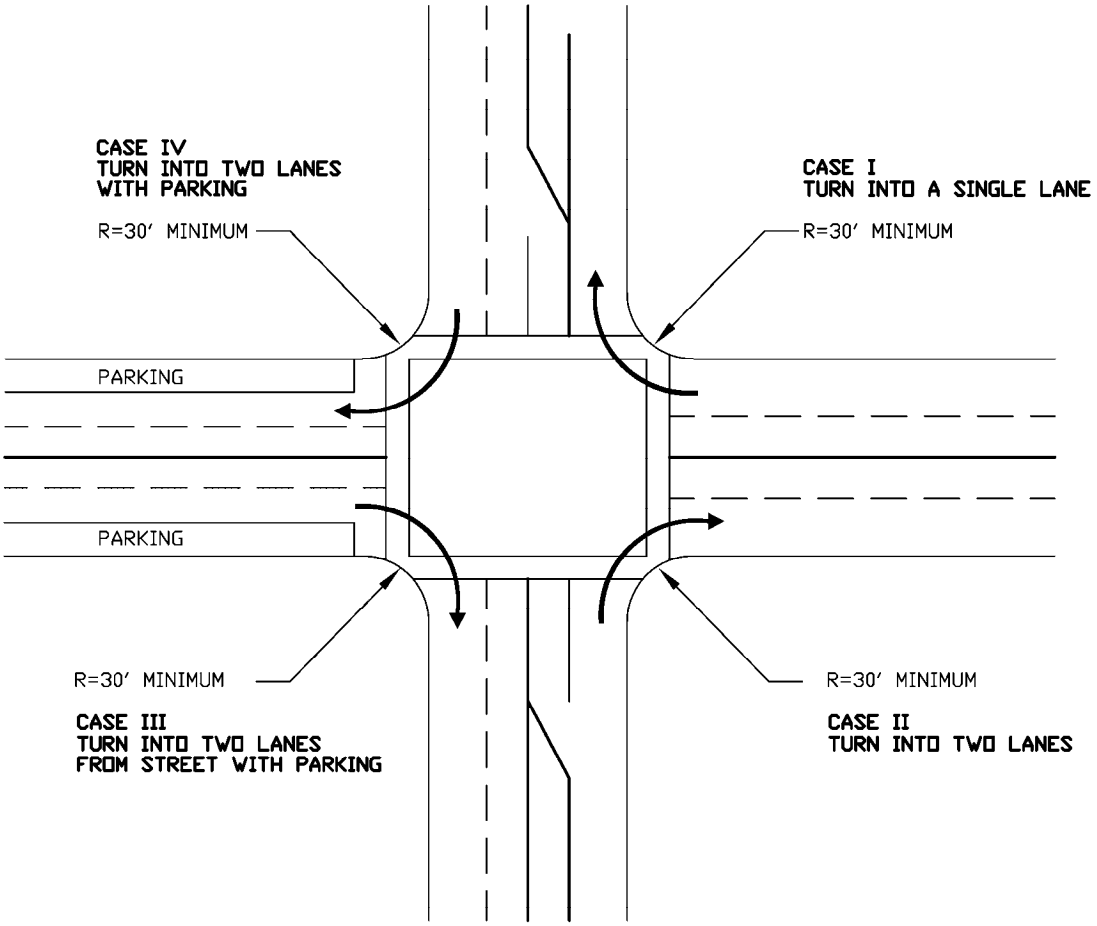

Intersection Design for Bus Turns (With no encroachment on adjacent lanes), Scale: NTS.

Bus Turnarounds

The following figure details the design requirements for three different types of bus turnarounds. Depending on the particular site's characteristics, it may be possible to implement any one of these turnaround types at the end of a route, at a park-and-ride lot, or at any other large transit facility that may require buses to completely reverse direction in a relatively small area.

Bus Turnarounds, Scale: NTS.

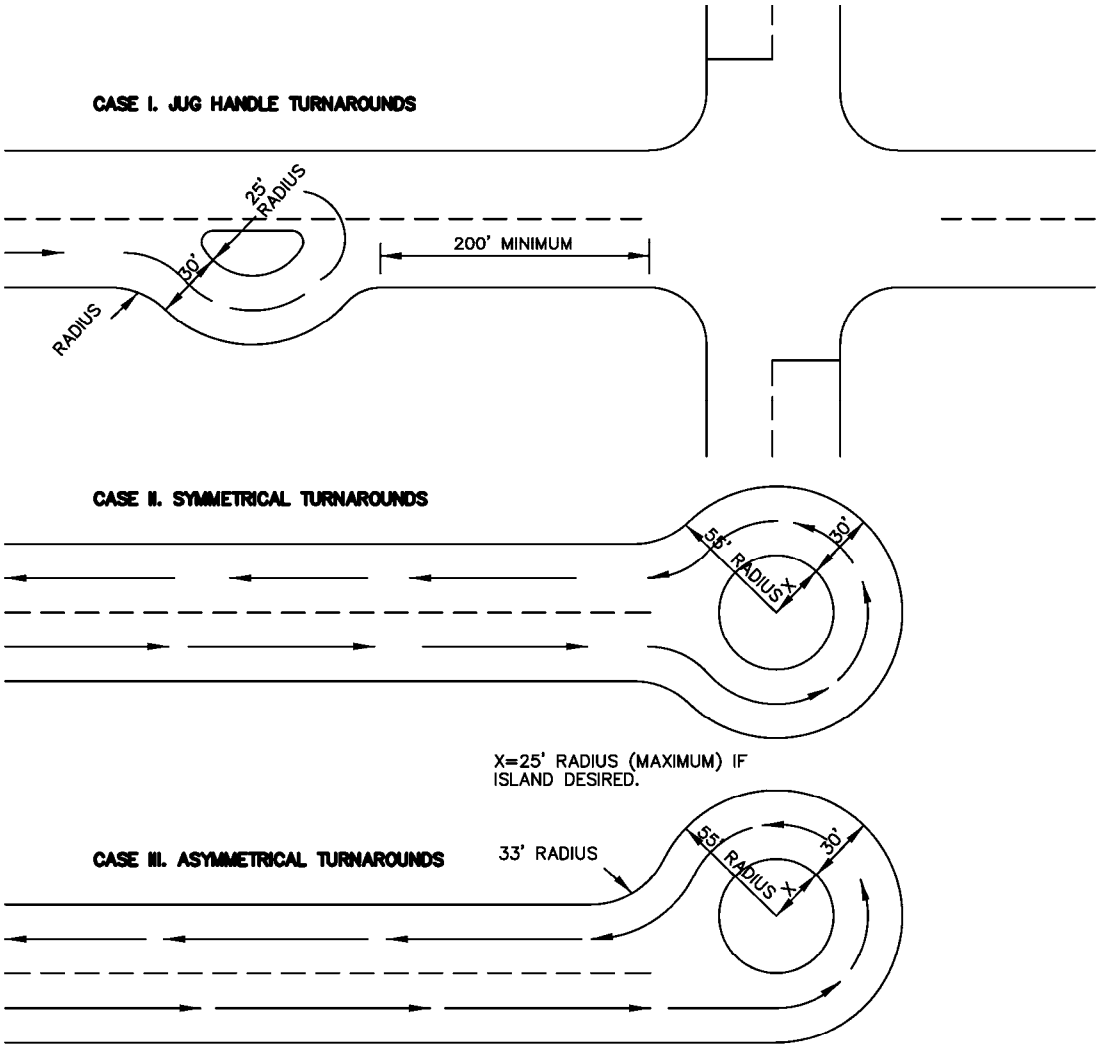

NOTE:
TO MAINTAIN SIGHT DISTANCE, ONLY LOW PLANTINGS ARE RECOMMENDED IN ISLAND AREAS.
30' LANE WIDTH ASSUMES NO PARKING IN LOOP AREA.

X=25' RADIUS (MAXIMUM) IF ISLAND DESIRED.

Transit-Oriented Development Guidelines

Characteristics

Improving the design of public transportation facilities not only means improving bus service, bus stops, and rail stations, it also means orienting development patterns to be more conducive to transit use. Transit-oriented development (TOD) encompasses this pattern. Generally, TOD is characterized by compact, more dense activity centers and developments that are served and connected by high quality public transportation services. More efficient service creates "transit-friendly" nodes and corridors, resulting in increased transit use, walking, and bicycling. Automobile use is still accommodated in a TOD, but is not treated as the sole mode of transportation. Some significant site-related development characteristics that should be considered in a TOD include the location of automobile parking and building location and design.

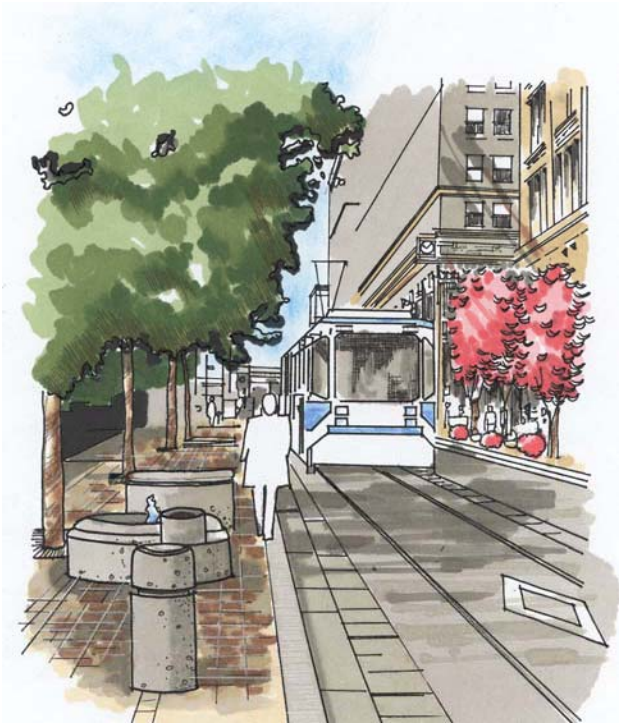

Characteristics of a Transit-Oriented Development

Essential

- Medium- to High-Density Development;
- Mixed-Use Development;
- Short- to Medium-Block Lengths;
- Transit Routes Every One-Half Mile;
- Two- or Four-Lane Streets;
- Wide, Continuous Sidewalks;
- Safe Street Crossings;
- Appropriate Traffic Buffering; and
- Street-Oriented Buildings.

Desirable

- Supportive Commercial Uses;
- Grid-Like Street Networks;
- Traffic Calming Along Access Routes;
- Closely Spaced Shade Trees Along Access Routes;
- Minimal "Dead Space" or Visible Auto Parking;
- Nearby Parks and Public Spaces;
- Small-Scale Buildings; and
- Aesthetically Pleasing Transit Facilities.

Nice/Somewhat Incidental

- Streetwalls;
- Functional Street Furniture;
- Coherent, Small-Scale Signage;
- Special Pavement; and
- Public Art and Loveable Objects.

Source: Ewing, Pedestrian and Transit-Friendly Design, 1996.

Location of Parking

The easiest way to locate buildings close to the street is to move automobile parking away from the street. Vehicle parking does not have to be in the front of a building to be convenient for patrons. When all or part of a parking lot is located behind the building, the development can be made more pedestrian- and transit-friendly. This design shortens walking distances between transit vehicles and building entrances, as well as between adjacent buildings.

Building Location & Design

Buildings should be located as close as possible to streets to make them more accessible to those choosing alternative transportation modes. Most of PCPT's bus stops are located on the street to maintain schedules. Entering parking lots is cumbersome and time consuming for large buses. Riding PCPT buses, therefore, is more friendly when buildings are also located near the street. Upon exiting the bus, passengers will have shorter, more pleasant, and more interesting walks to reach their destination when at least part of the land use fronts the street. Locating at least part of a development on the street also improves aesthetics by relocating automobile parking.

Clustered Development & Dense Street Corners

To enhance transit-friendliness, other building design and location features should be incorporated into new development and redevelopment projects. These include:

- clustering multiple buildings together; and
- developing and filling in street corners first.

Clustered Development

When more than one building makes up the site, they should be located close together to minimize walking distances. Existing or new PCPT bus stops should be located in a central location to the buildings.

Dense Street Corners

PCPT bus stops are often located at or near street corners, which often serve as natural focal points. Corners should be developed with transit supportive commercial uses, such as convenience stores, fast food restaurants, and services, such as banks and dry cleaners. Such development patterns make it easier for transit users to conduct many of their daily business activities without getting into an automobile.

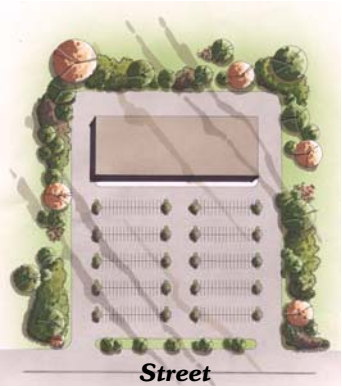

Poor Proximity

Longer walks from the bus to the land use tend to discourage transit use.

Excellent Proximity

The entire development is flush with the street, providing the best access for both transit users and pedestrians.

Land Use & TOD

Certain land uses are better suited for a TOD than others. Those land uses that are typically of a higher density and do not have to rely strongly on automobile access for their patronage should be sited in a TOD or other area identified for increased transit, bicycle, and walking access. Land uses that cater to the motorist should not be located in an area being developed as a TOD. The table below serves as a guide to the general transit supportiveness of various land uses.

Transit Supportiveness of Selected Land Uses

Land Use	Group 1	Group 2	Group 3
Residential Uses			
Single-family residential[1]			
Lots greater than 5,000 sq. ft.		●	
Lots 5,000 sq. ft. or less	✔		
Multi-family residential	✔		
Elderly residential	✔		
Public and Semipublic			
Cemeteries			✕
Clubs and lodges		●	
Convalescent facilities			✕
Cultural institutions	✔		
Day care, general	✔		
Government offices	✔		
Hospital, medical offices	✔		
Park and recreation facilities[2]		●	
Public safety facilities		●	
Residential care		●	
Schools and colleges		●	
Commercial Uses			
Ambulance services			✕
Animal sales and services		●	
Animal boarding			✕
Banks and savings and loans with	✔		
drive-up services	✔		
Building materials and services		●	
Commercial recreation and entertainment[3]		●	
Eating and drinking establishments	✔		
fast food or take-out		●	
with drive-through services		●	
Bar and tavern	✔		

Land Use	Group 1	Group 2	Group 3
Food and beverage sales		●	
Funeral and internment services			✕
Laboratories[4]		●	
Maintenance and repair services[5]		●	
Nurseries, commercial			✕
Offices, business and professional	✔		
Personal improvement services		●	
Personal services	✔		
Research and development services		●	
Retail services	✔		
Volume discount retail		●	
Travel services	✔		
Vehicle equipment sales and services[6]			✕
Automobile rentals			✕
Automobile washing			✕
Commercial parking garage[7]			✕
Commercial surface parking			✕
Service stations			✕
with convenience retail		●	
Vehicle equipment repair			✕
Vehicle equipment sales/rental			✕
Vehicle storage			✕
Visitor accommodations		●	
Hotels	✔		
Bed and breakfast inns	✔		
Motels		●	
Industrial Uses			
Includes truck stops, manufactured home sales, cold storage plants, junk yards, and solid waste transfer stations			✕
Light industrial/employment		●	

Group 1 = Transit supportive
Group 2 = May be transit supportive with appropriate development standards
Group 3 = Not transit supportive

1 = Small lots or attached single family housing is transit supportive.
2 = Small parks are transit supportive; large facilities, such as golf courses or multiple playing fields, are not.
3 = Indoor uses, such as cinemas and theaters, are transit supportive.
4 = Small-scale facilities, such as medical labs, are transit supportive.
5 = Neighborhood-oriented businesses are transit supportive.
6 = Vehicle sales and service can be transit supportive if on-site storage of vehicles is limited.
7 = Garages can be transit supportive if active, nonparking uses are located at street level.

Source: Planning and Design For Transit Handbook, Tri-County Metropolitan Transportation District of Oregon, 1996.

Pedestrians, Bicycling, & Transit

Pedestrian-Friendly Features

Pedestrian-friendly design features are inherently also transit-friendly, since all transit trips include a walking segment. Pedestrian-friendly features should be incorporated throughout areas serviced by PCPT. Pedestrian-friendly design factors related to building design and location include the following:

- interesting and varied facades;
- shaded, wide, continuous sidewalks and/or plazas linking all probable pedestrian movements;
- comfortable and functional street furniture that is shaded and protected from rainfall;
- buffering from vehicular traffic;
- traffic calming in areas where vehicles and
- pedestrians interact;
- minimized views of parking areas and other blank spaces;
- pedestrian-scale signage; and
- textured, colored pavement and other features to delineate pedestrian areas from automobile areas.

For example, consider the concept of interesting and varied facades. Building facades in transit areas should be designed to appeal to the pedestrian, rather than the motorist. The buildings should be small or articulated with facades that make them appear small. Facades should be varied and interesting to focus people on their surroundings, rather than their walk. The photograph shown to the right portrays an example of a more appealing walking environment.

Bicycle-Friendly Features

Successfully integrating bicycle transportation with public transportation means more than just equipping PCPT buses with bicycle racks. Other design improvements can be made to create a convenient intermodal transfer. These include improved bicycle travel facilities between residential areas and bus stops and improved storage facilities at the stops. Examples of bicycle facility improvements that can enhance the integration of bicycle travel with PCPT services include the following:

- bicycle-compatible roadways or bicycle lanes along transit station access roads;
- bicycle paths into and through park-and-ride lots;
- priority siting of bicycle parking/storage facilities near the transit vehicle loading zone;
- bicycle paths from neighboring communities that are shorter in length than roadways;
- clearly visible signs using the bicycle symbol for bicycle routes, parking/storage facilities, and bus stops serving bicyclists;
- transfer center design and siting accommodating to bicycles (e.g., curb cuts at parking locations, locating parking/storage facilities in convenient locations that do not require bicycles to be carried up or down stairs or through crowds of people, and locating parking/storage facilities in clear view of the general public or station attendants);
- lighting; and
- protection from weather conditions at parking/storage sites.

The facades of these buildings are varied and provide visual stimulation for pedestrians that can actually make walking distance and time seem shorter.

Glossary

Accessibility - The extent to which facilities are barrier free and useable by disabled persons, including wheelchair users. It also represents a measure of the ability or ease of all people to travel among various origins and destinations.

Accessory Pad - A paved area that is provided for bus patrons and may contain a bench shelter, and/or other amenities.

Activity Center - An area with high population and concentrated activities that generate a large number of trips, such as a Central Business District, shopping center, business or industrial park, or recreational facility. Also known as a Trip Generator.

Alight - To get off a transit vehicle. Plural: "alightings."

Americans with Disabilities Act of 1990 (ADA) - The law passed by Congress that makes it illegal to discriminate against people with disabilities in employment, services provided by state and local governments, public and private transportation, public accommodations, and telecommunications. The ADA requires that fixed-route transit be accessible and that complementary paratransit service be provided in the same geographic areas on the same days and hours as fixed-route service.

Approach Angle - A vehicle's front clearance angle, which is formed by the base of the front vehicle tire, the front ground clearance height, and the roadway.

Arterial Street - A roadway that is designed to move large traffic volumes between various points within a region. Typically, these roadways have limited access and connect with smaller collector streets.

Board - To go onto or into a transit vehicle. Plural: "boardings."

Bus Bulb - A bus stop where the sidewalk is extended into the parking lane, allowing a bus to pick up/drop off passengers without leaving the travel lane. Also known as a Curb Extension or Nub.

Bus Pull-Out Bay - A recessed bus stop area that allows a bus to leave the travel lanes to load and/or unload passengers. Also known as a Bus Turnout.

Bus Route Spacing - The distance between adjacent, parallel bus routes.

Bus Shelter - A building or other structure constructed at or near a bus stop that provides seating and protection from the weather for the comfort and convenience of waiting passengers.

Bus Stop - A point along a transit route at which passengers can board or alight from a bus. A bus stop is usually identified by a sign.

Bus Stop Infrastructure - The various elements that can be provided at a transit stop or station to help make transit more comfortable and convenient to patrons, including benches, shelters, lighting, vending machines, garbage receptacles, telephones, etc. These elements also are commonly referred to as "amenities."

Bus Stop Spacing - The distance between consecutive transit stops.

Bus Stop Zone Length - The length of the portion of roadway that is signed or marked as being available for bus use to load and/or unload passengers.

Bus Turnaround - A roadway system that allows a bus to return to the street that it is serving in the opposite direction of travel.

Bus Turning Radii - The dimensions needed to accommodate bus turning movements.

Bus Turnout - See definition for Bus Pull-Out Bay.

Central Business District (CBD) - The downtown retail trade and commercial area of a city or an area of very high land valuation, traffic flow, and concentration of retail business offices, theaters, hotels, and services.

Clear Space - The minimum unobstructed floor or ground space required to accommodate a single, stationary wheelchair and occupant (i.e., 30 inches in width by 48 inches in depth).

Collector Street - A roadway that serves internal traffic movements in an area by connecting several local streets with an arterial roadway.

Superstop - A large bus staging area used where many routes come together at a point in the system. The intent of a Superstop is to not only serve as a transit system destination/transfer station, but also to act as a community focal point.

Corner Curb Radii - The radius of the circle formed by the curve of the curb at the corner of two intersecting streets. It is used in street design as a measure of the sharpness of the corner.

Curb Ramp - A combined ramp and landing to accomplish a change of level at a curb in order to provide access to pedestrians using wheelchairs.

Departure Angle - A vehicle's rear clearance angle, which is formed by the base of the rear vehicle tire, the rear ground clearance height, and the roadway.

Discontinuous Sidewalk - A sidewalk that is constructed to connect a bus stop with the nearest intersection. The sidewalk does not extend beyond the bus stop.

Far-Side Stop - A bus stop that is located immediately across an intersection.

Fixed-Route - Transit service provided on a repetitive, fixed-schedule basis along a specific route, with vehicles stopping to pick up passengers at and deliver passengers to specific locations.

Floor to Area Ratio (FAR) - Land use analysis quotient determined by dividing the gross floor area of all buildings on a given lot by the total area of the lot.

Frequency - The scheduled time interval between consecutive buses operating in the same direction on a given route. Also known as Headway.

Grid Street Pattern - A network of parallel and perpendicular streets intersecting at 90-degree angles, forming rectangular blocks of land that are typically equal in size and have perimeters measuring between 800 and 1600 feet.

Headway - See definition for Frequency.

Intermodal Facility - A higher-level type of transit facility that is designed specifically to accommodate the meeting of two or more transit modes of travel. Typically includes expanded passenger infrastructure.

Kiosk - A freestanding, often cylindrical, device that displays transit maps and schedules and other passenger information. Kiosks typically are located at higher passenger volume stops.

Local Street - A roadway that provides direct access to the adjacent land and typically accommodates a low volume of traffic.

Major Local Transit Stop - Similar to PCPT's Standard Local Transit Stops, except with higher passenger boarding/alighting volumes. These stops typically are located at major activity centers or where PCPT routes intersect.

Mid-Block Stop - A bus stop that is located in between intersections.

Mixed-Use - In land use and transit planning, generally refers to different compatible land uses located within a single structure or in close proximity to each other.

Near-Side Stop - A bus stop that is located immediately before an intersection.

Overhang - The portion of the bus vehicle body that extends beyond the front or rear axle.

Passenger Activity - The number of passenger boardings ("ons") and alightings ("offs") that occur at a transit stop during any particular time period.

Paratransit - Comparable transportation service required by the Americans with Disabilities Act of 1990 for individuals with disabilities who are unable, because of their disability, to use traditional fixed-route transportation systems.

Park-and-Ride - A higher-level type of bus facility that incorporates a parking lot at a transit facility to accommodate the automobile as an access mode to transit. Park-and-ride facilities also can be used to facilitate bicycle access to transit, as well as auto and bike access to vanpool/carpool services.

Persons with Disabilities - People who, by reason of illness, injury, age, congenital malfunction, or other disability, are unable to use local transit facilities and services, without adequate facilities, as effectively as people who are not so affected.

Shuttle - A public or private vehicle that travels back and forth over a particular route, especially a short route or one that provides connections between transportation systems, employment centers, etc. Shuttle service may also provide connectivity between remote parking locations and large special events.

Standard Bus - A bus that is 35 to 41 feet in length.

Standard Local Transit Stop - Bus stops that have the lowest passenger boarding/alighting volumes. These stops account for the majority of PCPT's bus stops and provide for system access over a large geographical area.

Tapers - The portion of lane provided at each end of a bus pull-out bay to accommodate bus speed changes when entering and exiting traffic.

Transfer Center - A fixed location where passengers interchange from one route or vehicle to another.

Transit Hub - A higher-level type of transit facility that includes an expanded bus staging area and considerable passenger infrastructure.

Transit-Oriented Development (TOD) - In general, TOD encompasses the specific tailoring of development patterns to be more conducive to transit use. Typically involves a mixed-use community or neighborhood surrounding a transit station, stop, or route that is designed to encourage transit use and pedestrian activity.

Turning Radius - The turning path of a vehicle established by the outer front overhang and the inner rear wheel.

Waiting Pad - A paved area that is provided for bus patrons and may contain a bench, shelter, and/or other infrastructure. Also known as an Accessory Pad.

Wheelchair - A mobility aid belonging to any class of three- or four-wheeled devices, usable indoors, designed for and used by people with mobility impairments, whether operated manually or powered.

Wheelchair Lift - A device used to raise and lower a platform in a transit vehicle for accessibility by patrons that require the use of a wheelchair or similar mobility aid.

References

Brasco International, Inc., Detroit, MI. Slimline Series bus shelter schematics and images.

Ewing. Reid. *Pedestrian and Transit-Friendly Design.* 1996.

Florida Department of Transportation. *District 4 Transit Facilities Guidelines.* April 2002.

Jacksonville Transportation Authority. *JTA Mobility Access Program Handbook.* September 2003.

Maryland Department of Transportation. *Access by Design: Transit Role in Land Development*. September, 1988.

Metropolitan Transit Development Board. *Designing For Transit.* San Diego, California, July 1993.

Parsons Brinckerhoff. *Geometric Design Guide for Transit Facilities on Highways and Streets—Phase I, Interim Guide.* July 2002.

Transit Cooperative Research Program. *Report 19, Guidelines for the Location and Design of Bus Stops.* 1996.

Tri-County Metropolitan Transportation District of Oregon. *Planning and Design for Transit Handbook.* 1996.